GIS-T Enterprise Data Model
with
Suggested Implementation Choices

Kenneth J. Dueker
J. Allison Butler

October 1, 1997

Center for Urban Studies
School of Urban and Public Affairs
Portland State University
Portland, OR 97207-0751
(503) 725-4020
(503) 725-5199 FAX
http://www.upa.pdx.edu/CUS/

PORTLAND STATE UNIVERSITY SUPPORTS EQUAL OPPORTUNITY IN ADMISSIONS, EDUCATION, AND USE OF FACILITIES, PROHIBITING DISCRIMINATION IN THOSE AREAS BASED ON RACE, SEX, SEXUAL ORIENTATION, COLOR, RELIGION, NATIONAL ORIGIN, HANDICAP, OR AGE. THIS POLICY IS IN ACCORD WITH STATE AND FEDERAL LAW.

Abstract

Sharing of digital road map databases within and among organizations is dependent on translating user requirements to a data model that supports linear and non-linear location referencing systems. This paper examines issues of creating such a data model with the intent of sharing digital road map databases, and suggests implementation choices that can accommodate a range of applications. The proposal is best characterized as a GIS-T enterprise data model suitable for organizations responsible for any and all modes of transportation; e.g., aviation, highways, public transit, and railways. The proposed data model may be sufficiently robust to support ITS map database interoperability by maintaining independence among the geographic datum, the events that occur on the transportation system, the geometry to represent the system cartographically, and the paths through the system. Sample physical database designs are provided to show how the model might be implemented.

Table of Contents

Page

Introduction 1
The Basic Model 2
Adding Topology 5
Adding Cartography 6
Adding a Linear Datum 7
Supporting Non-transportation Features 9
Implementing the Basic Model Design 11
Implementing the Topological Data Model 13
Implementing the Linear LRS Datum 17
Conclusion 179

Figures

1. The symbology of data modeling using entity-relationship diagrams 1
2. The initial transportation data model 2
3. Adding intersections of transportation features to the initial model 4
4. The model with topological (pathfinding) entities added 5
5. The logical data model of Figure 4 with cartographic entities added 7
6. The logical data model of Figure 5 with linear datum entities added 8
7. The logical data model of Figure 6 with non-transportation features 10
8. A sample database design implementing the model in Figure 3 11
9. The database design of Figure 8 with pathfinding tables added 14
10. A sample database design for the linear datum entities shown in Figure 6 16

3-1. Transportation feature (highway) with the proposed geographic and geodetic objects ... A3-2
5-1. SDTS terms illustrated A5-1
5-2. How existing transportation databases (displayed using a straight-line diagram) can be integrated with the proposed geographic and geodetic objects A5-8

Appendices

1. General Concepts
2. Road Names as External Identifiers (Foreign Keys)
3. Linear Location Referencing Systems
4. Relational Database Design Principles
5. The Spatial Data Transfer Standard
6. References

Introduction

This paper describes the process of developing a universal enterprise-level data model and physical database design for geographic information systems used by transportation agencies (GIS-T). The data used by transportation agencies are fairly universal, much more so than the business processes that may be used. Thus, data is a better foundation to establish a common means of communication and GIS-T design. The data model presented here is applicable to all modes of transportation, all map scales, all software products, and all methods of data collection.

Data models are generally unfamiliar to computer systems users, but they excel in providing a clear view of how the various things about which we want to store and retrieve information are related to each other. Those "things" are referred to in data modeling as entities. Thus, the kind of data model that is most useful for our purposes is an entity-relationship diagram (E-R diagram). An E-R diagram for a generic GIS-T design is independent of map scale, specific entity attributes, mode of travel, and location measurement methods.

Figure 1. *The symbology of data modeling using entity-relationship diagrams.*

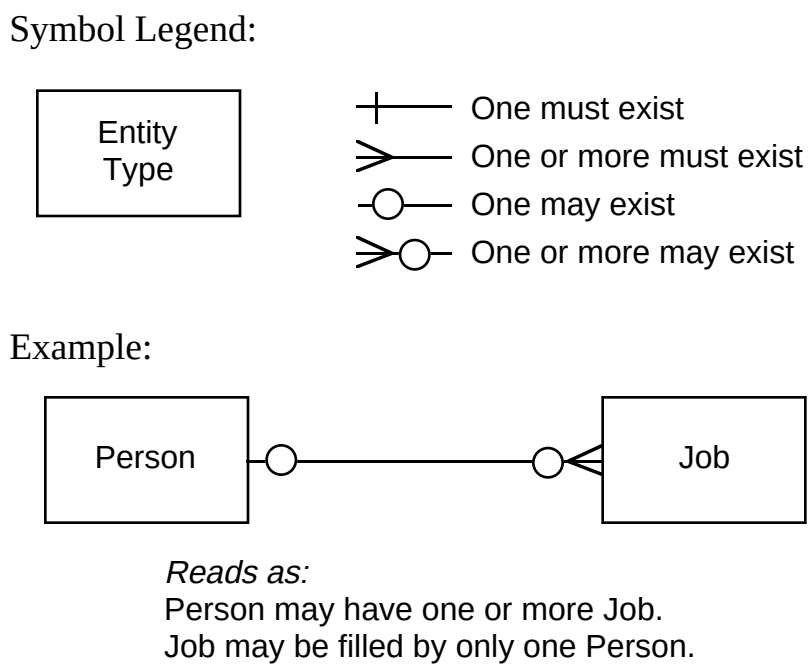

Figure 1 shows the few symbols used to construct E-R diagrams. An entity is a simple box with a name. Relationships are lines with one of three symbols used to define the relationship of entities connected by the lines. The example in Figure 1 shows that people may exist without having jobs, and jobs may exist without their being filled by people. Some relationships may be mandatory, such as a road segment must have one surface type. Some relationships are unusual and must be named. Most may be viewed as equivalent to "has," as in "an Employee has a Job."

We believe that the sharing of digital road map databases within and among organizations is dependent on describing user requirements in a data model. This paper examines issues of sharing digital road map databases and proposes a data model with suggested implementation choices that can accommodate a range of applications. The proposed data model is based on the independence of: (1) geographic datum; (2) the events that occur on the transportation system; (3) the geometry to

represent the system; and (3) the topology of links and nodes that make up transportation systems. The model is constructed through a series of steps that begins with a basic version then adds components to accommodate more complex needs. This journey of steps both explains how the model was developed and presents various versions to meet differing needs—all of which will facilitate data sharing since they are compatible.

The foundation of principles on which this work is based are found in the appendices. Appendix 1 includes information on general concepts and objectives. Appendix 2 covers the use of publicly known road names and other identifiers as preferred foreign keys to use to access data in heterogeneous GIS-T databases. Appendix 3 addresses the basics of linear location referencing systems, such as highway milepost systems. Appendix 4 provides general guidelines on relational database design. Appendix 5 describes the Spatial Data Transfer Standard and offers suggested additions and changes to support GIS-T.

The Basic Model

The most basic transportation data model is shown in Figure 2. It includes transportation features, the jurisdictions in which they are defined, and the events that occur on them. In this context, an event can be an attribute or physical component of the transportation feature.

Figure 2. *The initial transportation data model.*

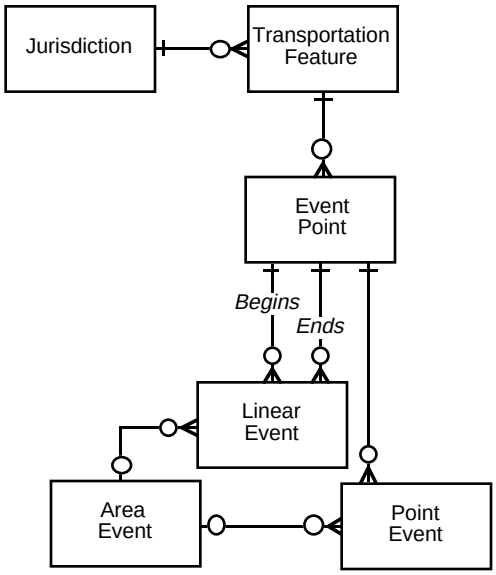

Figure 2 includes six entities. Three are subtypes of a more generic type, event. Here are the entity definitions:

- **Jurisdiction.** *The political or other context for designating transportation features and their names, which may be merely numerical references unique within the jurisdiction.* Jurisdiction need not be the same for all transportation feature types. Airports can be named on a national basis, with streets named on a zip code basis.
- **Transportation Feature.** *An identifiable element of the transportation system.* A transportation feature can be like a point (interchange or bridge), a line (road or railroad), or an area (rail yard or airport).

- **Event Point.** *The location where an event occurs.* Event Point is defined initially as an offset distance from the beginning of the transportation feature.
- **Event.** *An attribute, occurrence, or physical component of a transportation feature.* Attributes include functional class, speed limit, pavement type, and state road number—things that are not tangible but describe a tangible element, such as a road. Occurrences include traffic crashes and projects. Physical components include guardrailing, signs, bridges, intersections, and other tangible things that are field-identifiable elements. There are three event subtypes; a given event instance may be expressed as more than one subtype:
  - **Point Event.** *A component or attribute that is found at a single location (one event point).* Point events may occur independently or on transportation features of the linear or area form.
  - **Linear Event.** *A component or attribute that is found along a segment of a linear transportation feature.* Linear events are defined by two event points (beginning and ending). Linear events may occur only on linear transportation features.
  - **Area Event.** *A transportation feature component or a non-transportation entity that affects a transportation feature.* Areas can be explicitly represented as polygons or implicitly represented as to where they intersect transportation features. The implicit option is called an area event and is represented through related linear and point events. For example, an area event could be a city. The city could be expressed by creating a linear event for the portion of a transportation feature located within it, or as point events where the city limits cross a transportation feature. Another example could be a park-and-ride lot, which would be stored as a point event located where the driveway to the lot intersects the adjacent road (transportation feature). Area events may be applicable for any kind of transportation feature.

Let's look at the relationships between entities. First, we see that a jurisdiction may include one or more transportation features. Next, we see that a transportation feature may include one or more event points to define the location of point and linear events. A given event point may define the location of several point and/or linear events. For example, the speed limit on a street could change at the same point as the number of lanes. The model shows that there are two relationships between Linear Event and Event Point, one for the beginning event point and one for the ending event point. An area event may generate one or more linear and/or point events.

An obvious question is, "Why aren't there relationships between Transportation Feature and the three event entities?" It is certainly true that the transportation feature possesses the subordinate point, linear, and area events. However, that ownership is expressed only through an event's location on the transportation feature. Thus, the answer is that the Transportation Feature to Event relationships go through the Event Point entity. An event is "owned" by a transportation feature by virtue of its location on that feature; i.e., its defining event point(s).

It is equally important to look at the business rules included in the model, for data models are not independent of the business processes they serve:

- Transportation features are contained completely within a single jurisdiction. A transportation feature that exists in more than one jurisdiction must be subdivided at the jurisdiction boundaries it crosses. Transportation feature ID is unique within a given jurisdiction.
- The physical path of a transportation feature must be arbitrarily defined. While a highway transportation feature may follow the same path as a given named or numbered route, it is the physical feature, not the named or numbered route, that is being defined.
- The transportation feature name, or identification, must be independent of the named street or numbered route that may be followed. A publicly recognized name or number designation is an attribute of all or part of a transportation feature, not an identifier of a unique transportation feature. (We'll show how to construct named and numbered routes later on pp. 5-7 and in Appendix 2.) You must use an identifier that will never change.
- Point and linear events on linear transportation features, such as roads, are located using a linear location referencing system (linear LRS) based on a distance offset from a beginning point.

- Only one linear LRS is used to relate point and linear events to transportation features.
- All events must be assigned to a transportation feature; i.e., exist on, at, or adjacent to a transportation feature.

The data model in Figure 2 assigns an event to one and only one transportation feature and each feature to one and only one jurisdiction. This means that a point event representing an intersection of two linear transportation features must be assigned to both; i.e., there must be two intersection point events, one for each transportation feature. For example, the intersection of Broad and Main Streets may be looked at as one event, but it is defined as two in the data model of Figure 2: one on Broad Street where Main Street crosses it, and one on Main Street where Broad Street crosses it. This is certainly a valid approach. However, one of the advantages of going to GIS-T is being able to get past the one-at-a-time limitation imposed by straight-line diagrams. We need to do one more thing to complete the basic model: add the ability to relate an intersection-type point event to more than one transportation feature. This is done in Figure 3.

Figure 3. *Adding intersections of transportation features to the initial model.*

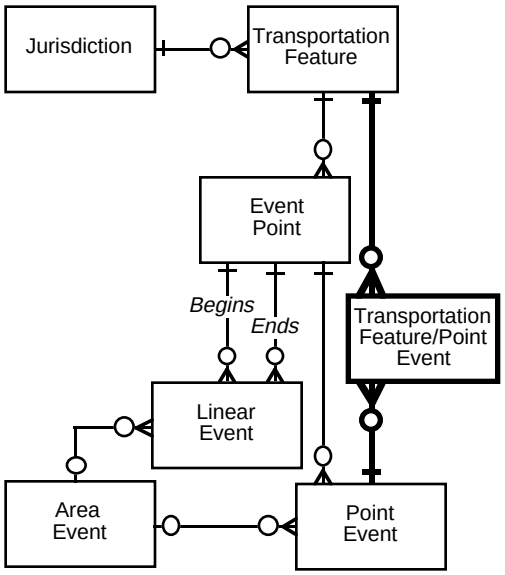

Figure 3 offers the solution of adding an intersection entity (Transportation Feature/Point Event) and presents the completed basic GIS-T data model. The new business rule here is that a point event may be located on more than one transportation feature. This allows us to see the intersection of Broad and Main Streets as one event involving two transportation features. It will still be stored as two intersection point events, one on each street. However, we now can create a single table that stores all the information about intersections, so the intersection attributes are not duplicated for each transportation feature. The two point event records store only the location of the intersection on each transportation feature, plus the fact that it is an intersection and the number assigned to the intersection. (More on physical database design starts at p. 10.)

Note that we did not, in Figure 2, simply make the relationship between the Transportation Feature and Point Event entities many-to-many; i.e., to show that a given transportation feature may include many point events and a given point event could be on more than one transportation feature. We are required to eliminate all many-to-many relationships in developing a relational database model since they cannot be directly implemented. This leads us to add a new entity,

called a resolution or associative entity, to eliminate the many-to-many relationship. Essentially, we have separated the many-to-many relationship into two parts. The original one-to-many from Transportation Feature through Event Point to Point Event is still there to show that a given transportation feature can include zero, one, or more point events. The new relationship, through Transportation Feature/Point Event, shows that a point event may be part of one or more transportation features. This resolution entity functions in the real world as an intersection, or a junction in a multi-modal context; we will use the term 'junction'.

Adding Topology

The next step in developing our GIS-T logical data model is to create the means to define paths through the transportation system. We will call these paths "traversals" to be consistent with NCHRP 20-27 documents and others (Vonderohe, et al., 1993, 1995). The requirement for pathfinding is that we provide topology, or information on how the various transportation features connect to one another. Adding junctions is a start on topology and, for some applications, that might be enough, but there is a better, more universal solution, which is shown in Figure 4.

Figure 4. *The model with topological (pathfinding) entities added.*

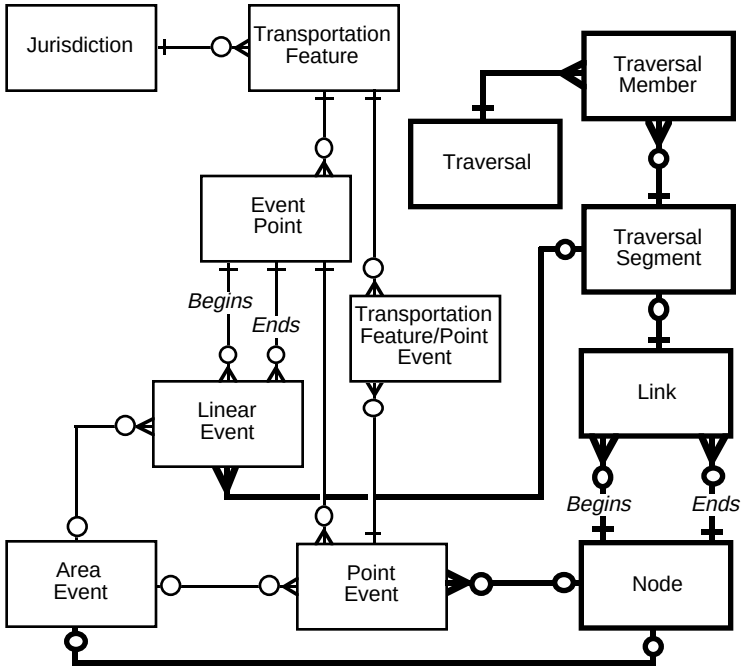

Five new entities are added in Figure 4. All but Traversal Member are defined in Appendix 5, but two definitions need to be repeated here:

- Traversal. *A path or route through a portion of a transportation network consisting of one or more links.* A traversal could be determined by following a state road number or looking for the best route to move a large load.
- Traversal Segment. *An atomic component of a traversal.* A traversal segment is defined by a link and its attributes. In some ways, Traversal Segment is a resolution entity between Traversal,

Link, and Linear Event. A traversal segment may be used to define superlinks by relating non-contiguous nodes located on the same transportation feature (Butler, 1995).

A traversal is composed of traversal segments. Each traversal segment is a link in a linear transportation feature to which have been added attribute data (linear events) that provide information useful to choosing a path. Links begin and end at nodes, which may be related to point events, such as bridges or junctions. Node data include information on allowable paths leading from each node; e.g., valid turns at an intersection. The design supports traffic modeling applications, with traffic analysis zones being area events expressed as centroids (nodes). Together, nodes and links create a sort of schematic circuit design of the transportation system.

Nodes and links may also define other networks, such as bus routes, that are overlaid on a physical transportation network. In such a case, the population of point events might be expanded to include bus stops, with links defining the buses that travel between stops. A traversal in the transit network could be defined for each bus's path as it follows its route, or for a path requiring a rider to change buses at nodes to complete a trip. If transportation features can be other than roads, then this model could serve non-highway modes of travel that follow the basic linear network model; e.g., aviation (air routes), railroads, and bike paths. Nodes can be "stacked" at specific point events, such as in the case of bus stops at street intersections or highways that lead to railroad yards, but since each is on a different network, the model shows only a one-to-many relationship between Node and Point Event. The various networks could be connected using virtual links, but that level of complexity is not shown here.

There is a many-to-many relationship between Traversal and Traversal Segment, one that shows a traversal is composed of one or more traversal segments and also that a given traversal segment may be part of many traversals. A mechanism is needed to resolve this relationship. Traversals with their own linear LRS also need a mechanism to store the beginning and ending linear LRS references. We have proposed a Traversal Member entity to meet these needs. A traversal member instance is the specific assignment of a traversal segment to a traversal.

Adding Cartography

If you want more than a text-only system—isn't that why you are interested in GIS-T?—then the model needs to be expanded to include the cartographic data entities used to draw maps, as shown in Figure 5 (next page). This logical data model defines a complete transportation system database with cartography. Eleven new entities have been added to the model to support the typical cartographic elements found on transportation maps, including those created using dynamic segmentation functions in GIS software. All 11 entities are defined in Appendix 5 (Area Feature is synonymous with Area in the appendix). Polygons have been provided to illustrate jurisdictions and area events. These polygons are composed of an interior area and one or more boundary rings. Base map strings are provided to cartographically describe linear transportation features. Due to the requirements of dynamic segmentation software, the relationship of base map strings and the transportation features they illustrate is one-to-one. Not all transportation features have to be illustrated, and those that are may not be represented by lines; some can be areas (e.g., rail yards) or points (e.g., bus stops). Point events are represented graphically using point symbols.

Point symbols are located on the map using a single cartographic point defined within the context of the GIS software's cartographic datum. Line segments are located using beginning and ending points. Dynamic segmentation subdivides a base map string into segments, called linear event strings in the model, that correspond to the transportation feature segments defined by one or more linear events. Base map strings and linear event strings are ordered sequences of line segments.

Note that there is no data relationship expressed between Base Map String and Linear Event String except as linear event strings are derived from base map strings by dynamic segmentation. Once they are created, linear event strings have no connection to the base map strings from which they were derived. The relationship between Linear Event and Linear Event String is shown as one-to-one, although a given string may exhibit the values of more than one linear event. For

example, line width might represent the number of lanes, while line color expressed traffic volume. However, this is actually a one-to-one relationship between a linear event table combining those attributes (perhaps through a relational join) into a single table and the related linear event string.

Area features have been provided as a way to cartographically illustrate area events and to support the use of area points, which are a simple way to address polygons using a single coordinate pair.

Figure 5. *The logical data model of Figure 4 with cartographic entities added.*

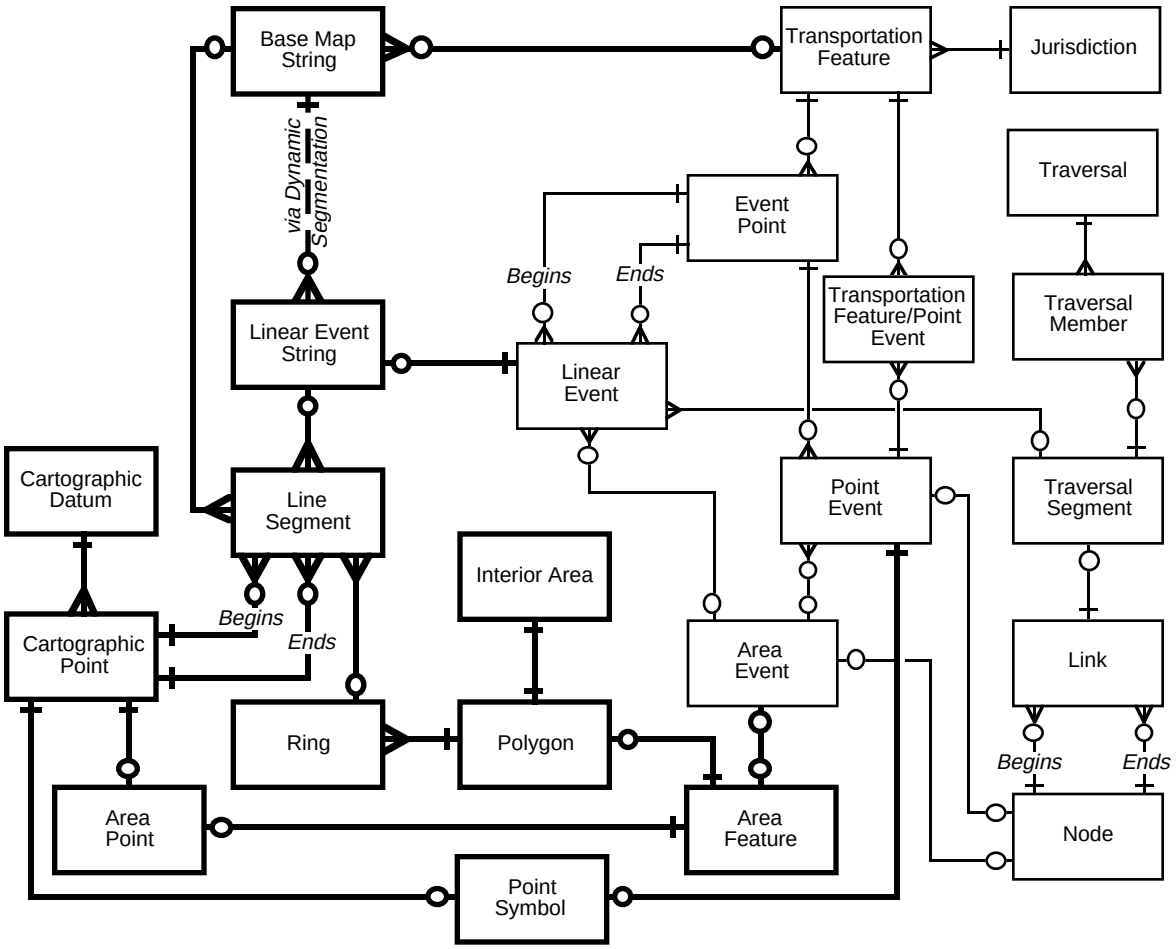

Adding a Linear Datum

GIS-T researchers and users are increasingly interested in improving data quality. One of the primary sources of data quality problems is the device typically used to collect data on highway features and attributes, the distance measuring instrument (DMI). A DMI is essentially a high-quality odometer; however, high-quality is a relative term. DMIs suffer from a number of errors, such as changes in the vehicle to which they are attached. Such errors are said to propagate, or get worse as the distance of use increases. Other error sources do not propagate, such as those associated with trying to precisely define the middle of an intersection while driving through it.

The concept of a linear datum has been proposed (e.g., Vonderohe and Hepworth, 1996) as a way to reduce the impact of these error sources and thereby improve the accuracy of location data collected according to a linear LRS. The concept of a linear datum is based on a set of well-defined and precisely located anchor points and anchor sections to which the DMI and other linear LRS measurement methods may be calibrated. However, the linear datum does more than just make the data better. It also provides a means of registering, or aligning, the transportation features they describe to a real-world coordinate system. This purpose is accomplished by locating the anchor points in many different LRSs; e.g., state plane coordinates, the geode used by GPS, the linear LRS, and any other LRS of interest.

Figure 6. *The logical data model of Figure 5 with linear datum entities added.*

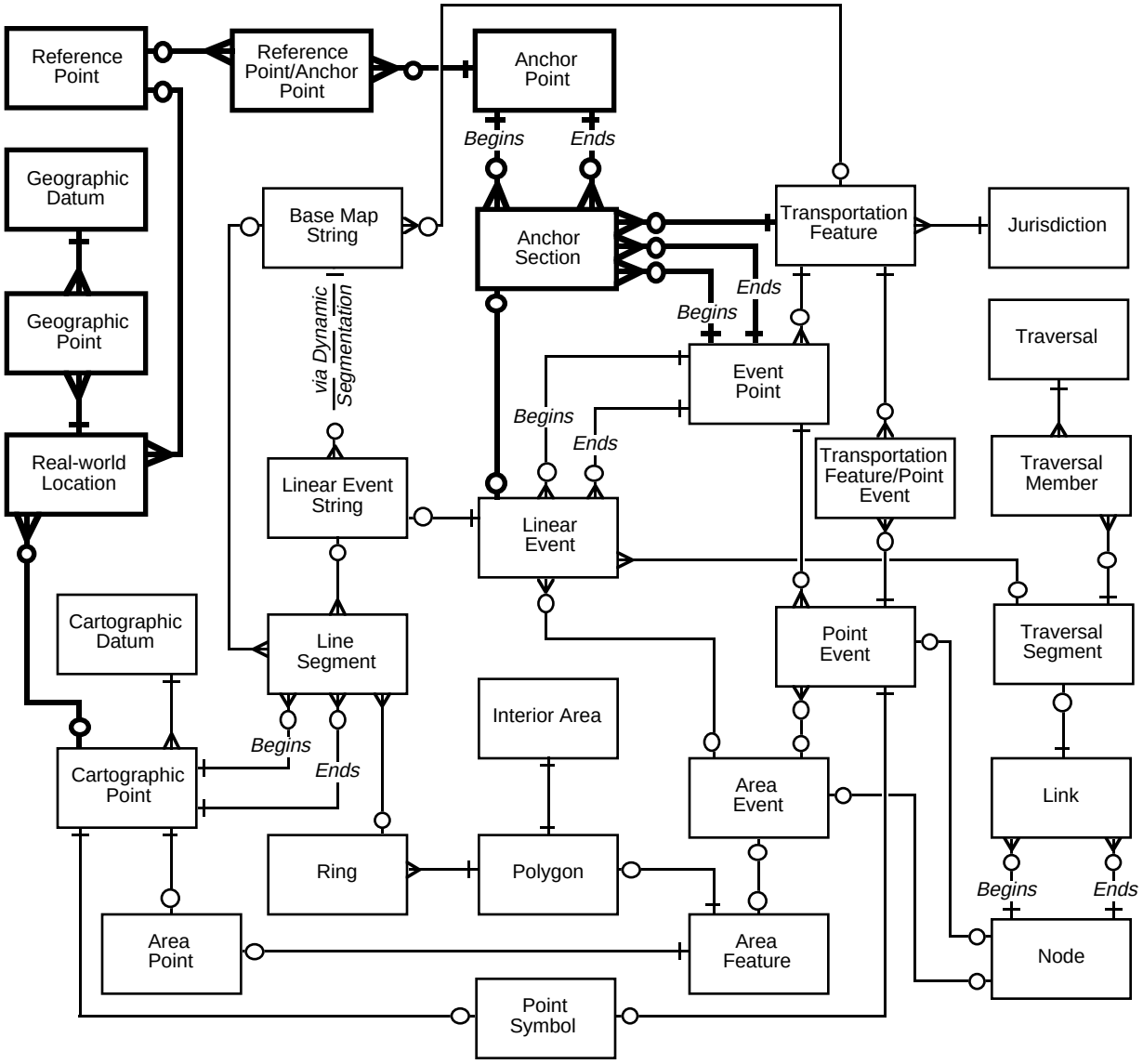

As you might expect, new entities must be added to the data model we've been developing to accommodate the needs of the linear datum. The data model from Figure 5 has been enhanced in Figure 6 (previous page) with the new entities needed to support the linear datum. A transportation feature has one or more anchor sections to provide linear datum information, such as a highly accurate length measure. Each anchor section is defined by a pair of anchor points.

Anchor points may be combined to serve more than one transportation feature, so linear LRS measurements are not provided for them directly. Anchor sections carry the linear LRS measurements for their beginning and ending anchor points since those measurements are applicable only within the context of the related transportation feature. Anchor points are often conceptual in nature, typically being such things as the intersection of two road centerlines, so they must be tied to physical objects that are more readily located. These physical objects, called reference points, can be located in all applicable geographic datums. To avoid a many-to-many relationship between Reference Point and Geographic Datum, a resolution entity called Geographic Point has been added to the model. The Geographic Point entity carries the address of the reference point in each geographic datum. The Reference Point/Anchor Point entity allows a given reference point to locate more than one anchor point, and for a single anchor point to be located using more than one reference point.

The Real-world Location entity describes the actual physical object being described. For example, a real-world location could be "the intersection of Main St. and Broad Ave." This could result in the related geographic point being the exact intersection of the two street centerlines defined as a latitude/longitude pair of coordinates established in the North American Datum of 1983 (geographic datum), as measured from a monument in the northwest corner of the intersection (reference point). The intersection centerpoint would also be defined as an anchor point that begins an anchor section and defines the 0.000 milepoint (origin) of a transportation feature and may be related to cartographic points in a cartographic datum.

Supporting Non-transportation Features

The final option we will discuss is support for non-transportation features and the direct positioning of transportation features. If cartographic display of these features is adequate, the models shown in Figures 5 and 6 are sufficient. This is because the models already allow areas, line segments, and point symbols that are not related to transportation features by virtue of their optional relationships: an area feature may relate (through events) to a transportation feature; a base map string may relate to a transportation feature; a point symbol may relate to a point event. GIS software functions are available in many fully featured products to define and explore the spatial relationships between graphical objects on a map. However, we offer a more elegant solution in Figure 7 (next page) that allows non-graphical analyses and a fully integrated database. This is the complete GIS-T enterprise data model.

The only changes to the model of Figure 6 are the addition of explicit point and linear feature entities, plus a way to relate event points to geographic points. Point and Linear Feature entities support the addition of non-transportation features using points and lines in much the same way that Area Feature already supported non-transportation polygons. The last change supports both the location of event points on the surface of the earth—not just on a transportation feature—and the use of non-linear LRSs for defining the position of transportation features and their events. This facilitates the location of events using such field tools as global positioning system (GPS) receivers, in addition to the typical DMI for route/milepoint linear LRSs.

All sorts of additional relationships could be defined for the entities in Figure 7. For example, Area Feature could have a one-to-many relationship with Area Event, with each area event storing an attribute of an area feature. The other non-transportation feature entities could be enhanced with a number of other entities, such as their own events. One could instead simplify the model by eliminating Transportation Feature as a separate entity and using the appropriate generic Linear, Point, and Area Feature entity to represent each transportation feature. We kept them separate here since a transportation agency is likely to treat transportation and non-transportation features quite differently. We support the correlation of a GPS-positioned geographic point and

the related linear LRS-located event point through an optional relationship. This relationship shows that one event point may relate to one or more geographic points; e.g., one each supported geographic datum.

Figure 7. *The logical data model of Figure 6 with non-transportation features.*

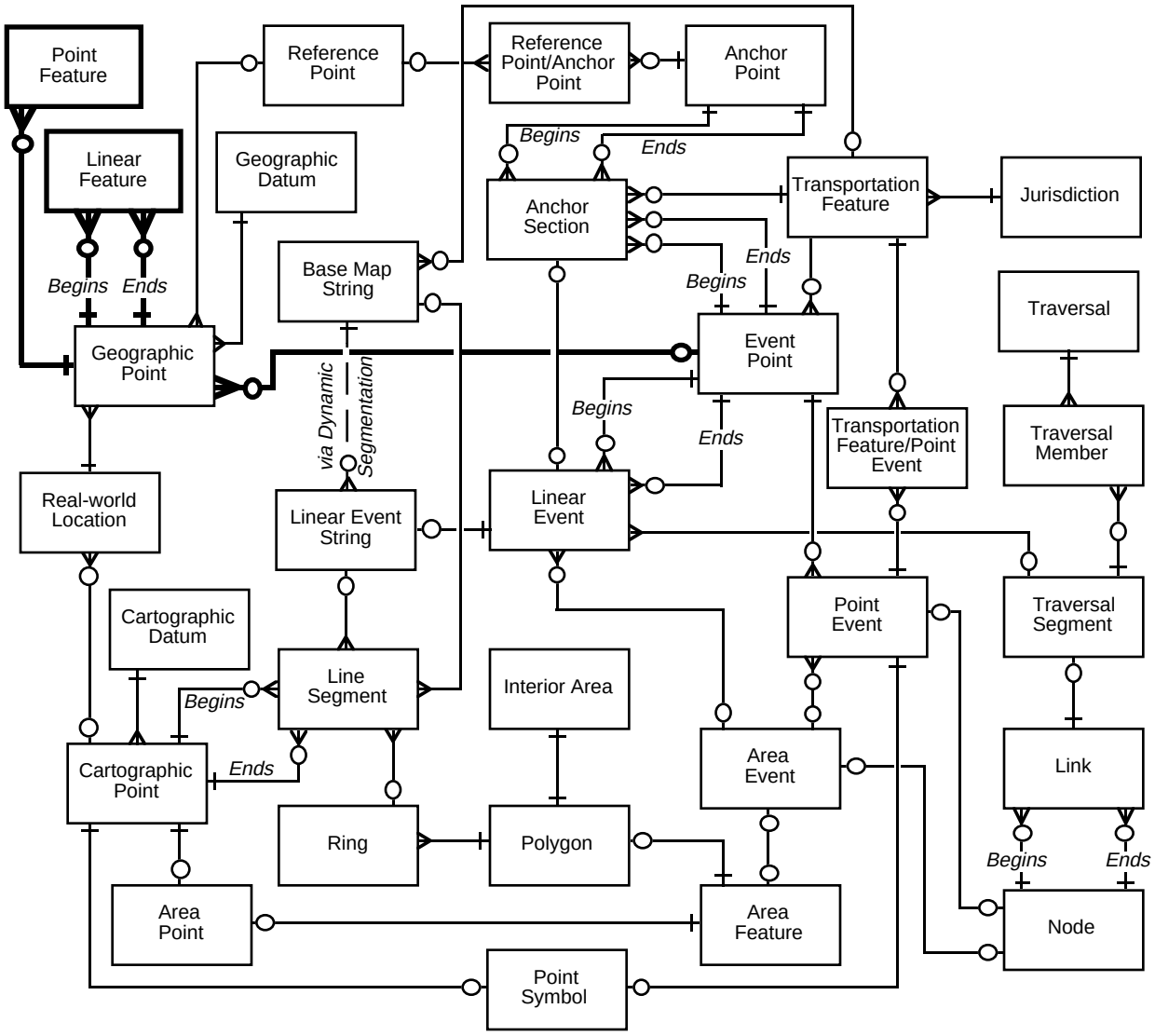

The bottom line for database design is that the business needs of an agency should determine whether any additional entities and relationships are needed or may be eliminated. The model shown here is universal and enterprise-wide in nature. It has been subjected to extensive conceptual testing to make sure it accommodates all potential application needs; testing of the physical database design is anticipated in the near future. Recognizing that each agency should go through the data model development/validation process to ensure that the model or its derivative meets the agency's needs, it is still useful to offer a sample physical database design process. The

next several sections apply the same feature-based steps to developing a sample physical database design to implement the data model at a state DOT.

Implementing the Basic Model Design

Figure 8 shows what a physical database implementing the model in Figure 3 for a state highway system might look like. The format we use for physical database design uses the same entity relationship symbols, but here they refer to the relationship between relational database tables. Each box represents a table in the database, with its name given at the top (shaded area). A table's primary key, or set of data elements that defines a unique address for each row, is underlined. Optional data elements are shown in brackets. Notice that there is not a one-to-one relationship between data model entities and database tables.

Figure 8. *A sample database design implementing the model in Figure 3.*

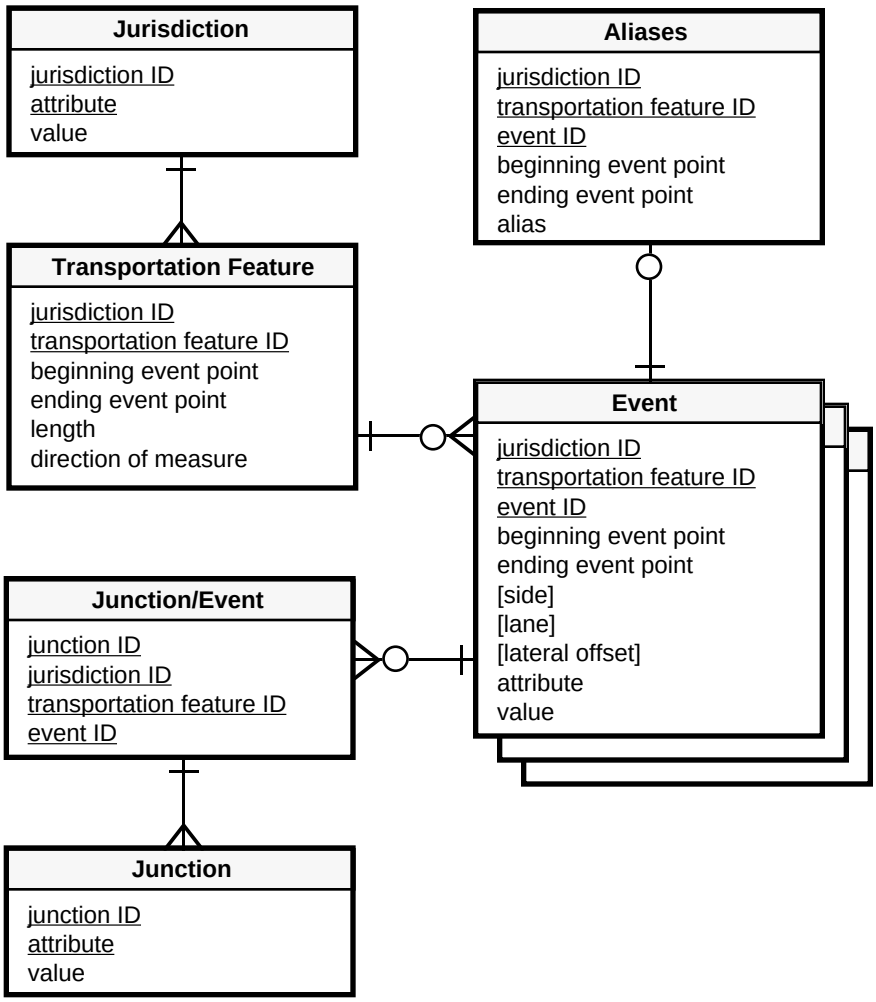

The Jurisdiction Table stores data that apply to the entire jurisdiction in which transportation features are defined. For this example, let's assume the jurisdiction level is county. Thus, the Jurisdiction Table stores information about each county in the state, such as population, DOT District in which it is located, etc. A table could also be created to store a list of all the transportation features located within each county.

In the same way, the Transportation Feature Table stores information that applies to an entire transportation feature, which in this example is the extent of a road in a given county. Transportation feature ID is a number. Since the transportation feature ID is unique only within a jurisdiction, then both the jurisdiction ID and the transportation feature ID are needed to uniquely define a specific transportation feature. An event point is the linear LRS measure for a location on a transportation feature. The beginning event point is the origin measure, usually zero. The ending event point is the highest possible measure; i.e., the end of the feature. Transportation feature length must be explicitly stated as an attribute since it may not be the simple mathematical difference between the two defining event points. It is also a good data quality check.

We've created a separate Aliases Table to store the various names by which all or a portion of the transportation feature may be known. One could alternatively create a view, or virtual table, using the linear event records storing the names assigned to road segments. The primary key for this table is rather complex since more than one name may begin at a single point; e.g., a county road number and local name may both start at the county line. Note that there was no specific alias entity in the model. The decision to include a table specifically for this kind of linear event is the type of decision one must frequently make to implement a conceptual data model. Since most people know the name of a highway segment, the Aliases Table could be a convenient way to use street name as a foreign key to locate the correct road of interest and its descriptive data. A foreign key is a data element present in one table that can be used to connect to related records in another table in the database; see Appendices 2 and 4 for more information. The Aliases Table can be omitted and Event Table records used, or the Aliases Table can be constructed as an extract (subset) of the Event Table; the latter option is preferable.

The physical data model in Figure 8 shows that there may be many Event Tables, all with certain common data elements. A common structure facilitates the combination of various event tables to describe a segment of highway, so even point event tables should include an ending point reference column (which will have null values). Some tables may optionally include information on lane, side, and offset to accommodate such attributes as traffic counts (by lane), pavement types (by side of road), and signs (offset from road edge). An event ID is used to help uniquely identify a record in the event tables; event ID is unique only for a given transportation feature. Given this design, a junction would result in a record in the Event Table for each intersecting transportation feature, each with its own event ID.

We have elected to refer to the table associated with the Transportation Feature/Point Event resolution entity as the Junction/Event Table. Normally, all data elements in a resolution entity table should be part of its primary key, the various parts of which will provide foreign keys to relate to the appropriate records in other tables. The Event Table's primary key (jurisdiction ID, transportation feature ID, and event ID) is used in the Junction/Event Table to connect to the point event(s) associated with a junction. The intersecting transportation features may be found (without regard to precise location) by using the Transportation Feature Table's primary key.

A Junction Table stores information about the junction, such as traffic control for a road intersection. A given junction may have many attributes, and there will be one record for each intersecting transportation feature in the Junction/Event Table. This design leads to the use of a partial primary key for the Junction Table of junction ID to identify all the attribute records for a given junction. An alternative would be to put all junction attributes in a single record, thereby eliminating the need for attribute to be part of the Junction Table’s primary key.

One should note that the Jurisdiction, Event, and Junction Tables are highly normalized in that they will provide storage space for any number of attributes without the need to deal with null values. An alternative would be to use a separate row (data element) for each attribute.

The Event Table’s design requires that event ID be different for each attribute. This may be undesirable in the case of an event described by multiple attributes. In this case, more attribute

columns (data fields) could be added, or the attribute field could be added to the primary key. The full primary key for the Event Table must be included in the Junction/Event Table, so any changes to the Event Table's primary key must be reflected in changes to the Junction/Event Table.

Incidentally, an end-to-end junction is required at the jurisdiction boundary where a transportation feature is subdivided. This means that a given junction ID will be applicable to two jurisdictions; therefore, junction ID must be unique in the entire database. Some people may question the efficiency of creating junctions where intersections do not occur except relative to a boundary. However, this approach can increase the efficiency of database maintenance by compartmentalizing the database into manageable pieces, such as for base map maintenance.

A junction need not imply the physical connection between two transportation features. For example, an overpass may define a "junction" that imposes a height restriction on one transportation feature but does not provide a physical intersection. Bridges may be universally defined as junctions, whether they carry one road across another road or a water feature. Such an approach could be useful for pathfinding applications, which is the topic of the next section.

Implementing the Topological Data Model

Figure 9 (next page) shows the new data tables needed by our sample physical database design to accommodate the new entities added in the Figure 4 data model. The Traversal Table stores information that applies to the entire traversal. Data that apply to only a part of the traversal is assigned to one or more traversal segments.

Multiple Traversal Segment Tables are shown since different ways of defining paths may need different attribute sets. One kind of path through the transportation system is the collection of linear events that all have the same route number or street name. (This is a better way to physically provide a way of tracking numbered or named routes than using the number or name as the primary key since what we call a road can easily change. A primary key should never change.) Named route traversals would only need the alias(es) of the transportation feature linear events used to create the traversal segments. Other kinds of traversal may need a lot of physical data, such as to route large vehicles. By including beginning and ending node numbers in the Traversal Segment Table, a separate Link Table is not required. Link direction can be expressed by including a traversal segment attribute for the information.

A Traversal Member Table provides a list of traversal segment records used by each traversal. A given traversal segment may be part of several traversals. In this design, the traversal segment ID must be unique statewide. The Traversal Member Table could also include beginning and ending measurements for a traversal-specific linear LRS, such as that used on Interstate highways. This approach is based on distance over the length of the traversal. Since a traversal segment may be part of several traversals, the Traversal Segment Table can only include linear LRS measures based on the original transportation feature events they include.

The link and node data presented here are not the same as links and nodes in such products as Arc/Info that represent a combination of cartography and topology. This data model supports true, non-cartographic topology in a relational database. This allows pathfinding to occur using normal database queries, not complex functions in GIS software. In fact, the entire database is designed to eliminate the need for complex GIS software for all functions except to display events and their derivatives using dynamic segmentation.

The Node Table identifies adjacent nodes, the number of which is subjective, which makes this table a denormalized one. Usually, one would want to eliminate a repeating field, such as adjacent node. However, this example places them all in one record in order to improve the performance of pathfinding applications. Link direction may also be expressed here by eliminating all adjacent nodes that cannot be reached with a legal move (e.g., one shouldn't route a vehicle the wrong way down a one-way street). A separate Node Attribute Table (not shown) could be created to store data about the node itself, such as what kind of node it was. Alternatively, this information could be added to the Node Table or stored in the Junction Table. This design creates links as they are needed to generate traversal segment records. An alternative design would be to

Figure 9. *The database design of Figure 8 with pathfinding tables added.*

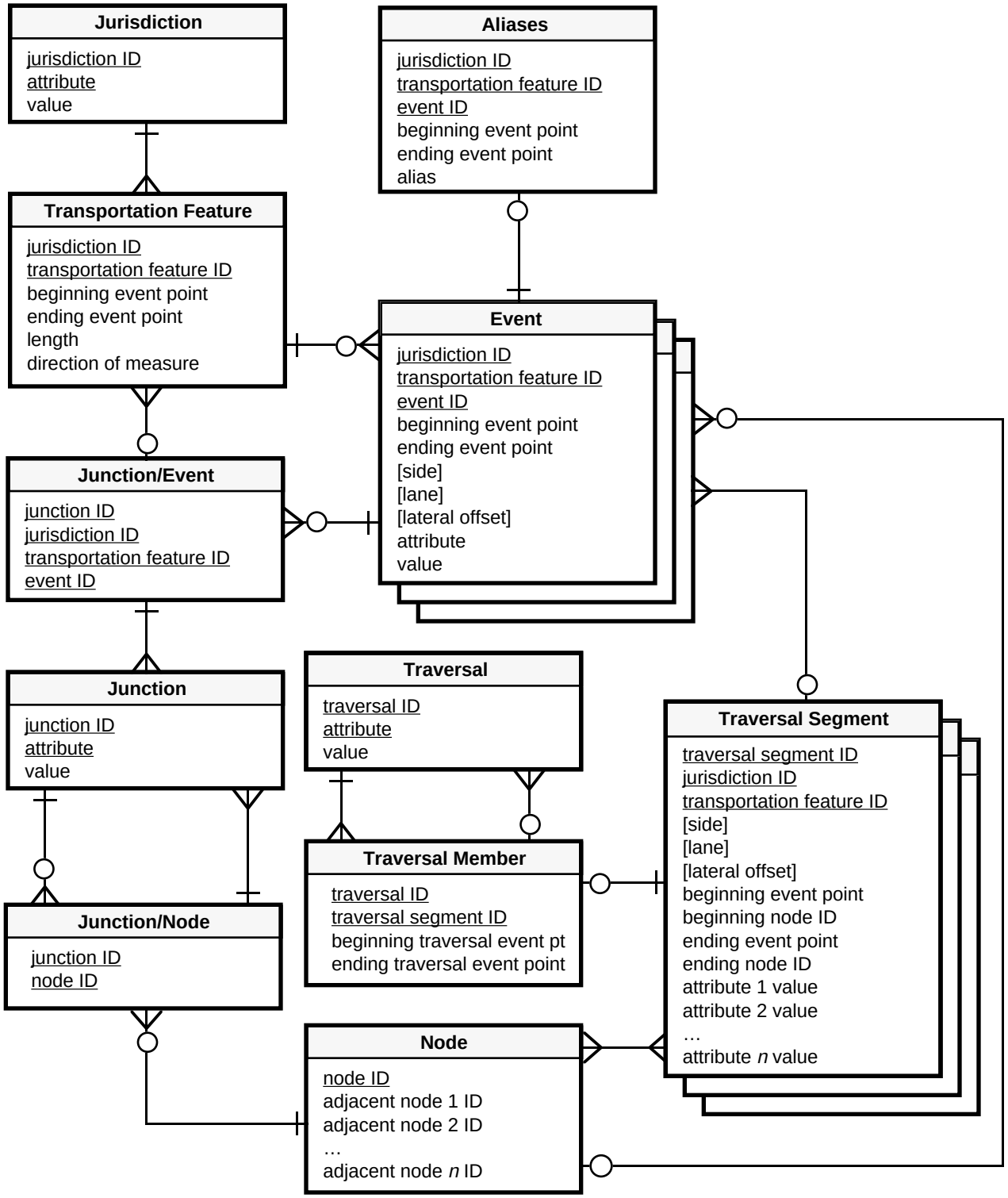

maintain a Link Table listing all valid node pairs. However, such an alternative carries an extra burden for database maintenance as any topological data changes must be implemented in more than one table.[1]

A Junction/Node Table shows which nodes may be located at junctions. The relationships shown support the presence of more than one node at a given junction, as well as allowing a given node to include multiple junctions. The latter option may be useful for treating interchanges with many physical junctions as a single node for connectivity purposes, or to allow a transportation model to simplify the highway network by using a single node to represent multiple intersections.

If all you need are data about transportation features, the database is probably complete for you at this point. The model and sample implementation database design support all kinds of transportation features and services, including highways, transit, railroads, and aviation. (Of course, data about airports is not likely to utilize linear events except, perhaps, for airport runways.) Paths can be defined through the transportation system—even moving from one mode of travel to another—by supplying nodes where transportation features of all types intersect. This would include placing a node where one mode connects to another, like at the end of a highway link that accesses an airport or rail yard. Pathfinding does not require maps.

A sample physical database implementation is not offered for cartographic entities since most cartographic databases are proprietary to each software vendor's product line. A few points, though, are worth mentioning. The primary key of a linear transportation feature's base map string table would include both cartographic identifiers and those of the transportation feature (jurisdiction ID and transportation feature ID). Attributes of the base map string would include the defining geometric points in the cartographic datum and by the beginning and ending reference points of their associated transportation features. Linear event string records would be similarly constructed, but by using data in the linear event table(s) from which they were derived. Linear event strings constructed by dynamic segmentation may be viewed as the equivalent of the result set of a relational join between linear events and base map strings.

Implementing the Linear LRS Datum

To help visualize the linear datum entities, a sample physical database design for these entities is offered in Figure 10 (next page). Only relevant tables are included in this figure. As before, primary keys are underlined and optional data elements are enclosed in brackets. The Transportation Feature Table is the same as that shown in Figures 8 and 9. References to beginning and ending event points in this table and in the Transportation Feature/Anchor Section Table are different. In the Transportation Feature Table, the beginning and ending event points are those of the entire transportation feature. In the other table, beginning and ending event points are for the limits of the subject anchor section.

The Anchor Section Table includes the beginning and ending anchor point IDs. The related beginning and ending point linear LRS references (e.g., milepoints), anchor section length (measured in the linear LRS), and the direction of increasing linear LRS measurements are in the Transportation Feature/Anchor Section Table. These two tables could have been combined, but the illustrated approach allows one to maintain the linear LRS locations of anchor points separately from the datum entities of anchor points and anchor sections.

The Anchor Point Table includes the anchor point ID, the related reference point ID, an anchor point name, and *x*, *y* offset distances from the reference point. It is assumed that a single means of measuring these offsets will be used. The anchor point name, which could be something like "the intersection of Broad and Main Streets in Ourtown," provides a real-world reference that

---

[1] It is possible to use only a Link Table consisting of valid node pairs and then drop the Node Table—or at least restrict its use to carrying node attributes—since the Link Table could be used to find paths by looking for common end nodes. However, it is anticipated that such a design would be less efficient than one using the Node Table since a second table query would be needed to find all candidate links originated from the end node. With the suggested Node Table, all valid links are already available in one record.

is readily understandable to help define the location. By making reference point ID part of the primary key for the Anchor Point Table, one is able to accommodate the many-to-many relationship supported by the Reference Point/Anchor Point entity. Although a much simpler fix than using a separate table, it does have the disadvantage of requiring duplicate entries for anchor point name for each combination of reference and anchor points. This overhead is insignificant if most anchor points will be tied to a single reference point.

Figure 10. *A sample database design for the linear datum entities shown in Figure 6.*

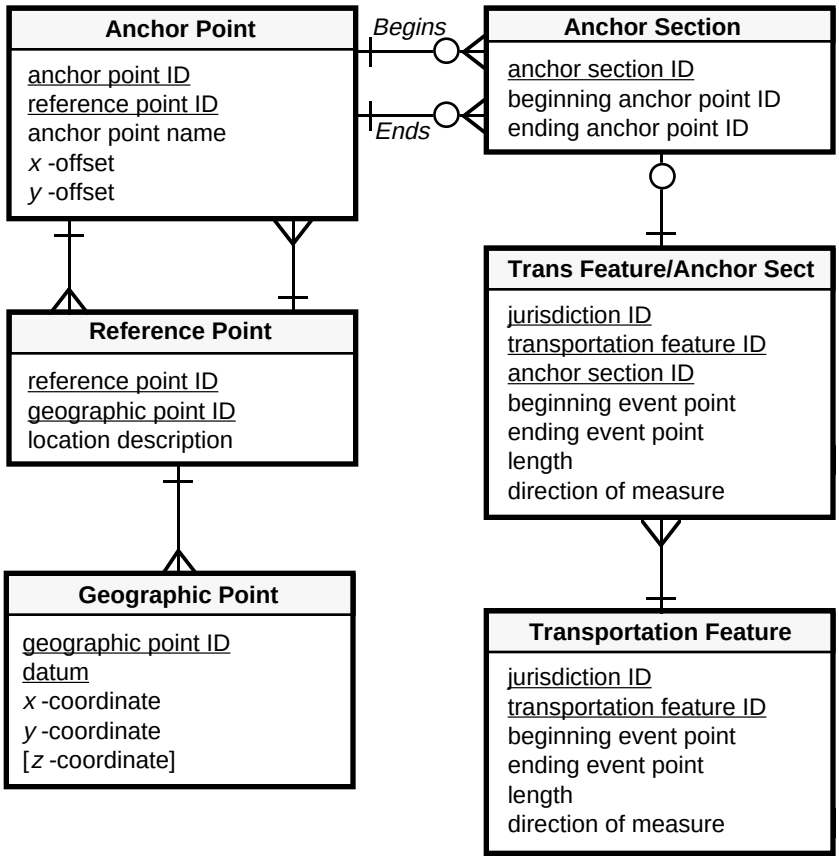

The Reference Point Table provides the connection to the one or more geographic points that provide the location reference defining the point on the earth. The location description field could be used to store a comment regarding the general location of the reference object, such as "SW corner of Broad and Main Streets in Ourtown." One could include other descriptive information on the reference object itself in a separate table that had reference point ID as its primary key.

The Geographic Point Table provides a reference point's geographic location described according to each datum in which the reference point has been located. Elevation information may be included as a *z* coordinate. A look-up table describing all the datums could also be included.

In order to serve as useful database registration points, it is recommended that anchor points be readily located on the transportation feature base map; e.g., at intersections, bridges, and boundary crossings. The other business rule implied by this design is anchor sections are optional

parts of specific transportation features; i.e., an anchor section must belong to only one transportation feature.

To provide a cartographic means of illustrating the location of anchor points and anchor sections on the base map, they may be defined as point events and linear events, respectively. Geographic points may be mapped as geometric points using GIS software functions.

The alert reader will notice that the conceptual structure of anchor points and anchor sections is analogous to that of nodes and links. Indeed, nodes at transportation feature junctions are likely to coincide with anchor points. However, the physical implementations are substantially different, anchor points and nodes are likely to be maintained by separate functional areas within a given agency, and nodes often do not correspond with a precise physical location while anchor points always do. Node and link data elements in GIS-T software products should not be used to represent anchor points and anchor sections. No topological information, save for the beginning and ending anchor points defining a given anchor section, should be provided in the linear datum.

Conclusion

We have shown how one can progress from a simple model of transportation data to a more complex one supporting topology, cartography, and non-transportation data. We have illustrated how the logical data models could be implemented using sample physical database designs. Users should pick and choose the appropriate entities and relationships they need to meet existing and anticipated needs. However, it is suggested that the use of an overall, universal data model by all transportation agencies has a number of advantages. Among these are the ability to more readily exchange data, to speak with one voice when expressing the needs of GIS-T users to software vendors, and to better utilize the experiences of other agencies in developing and supporting GIS-T systems. The complete data model we offer is in Figure 7, which includes all entities and is governed by the business rules discussed in the paper.

The appendices contain extensive technical data describing the various entities, concepts, and business rules expressed in the model. The appendix on the Spatial Data Transfer Standard proposes changes to that document that will implement the new concepts and entities presented in this paper. In addition to this content, you are invited to review the listed references for background information for more details on underlying concepts.

Appendices

Appendix 1
General Concepts

Linearly referenced data are those data located on a linear transportation feature using an offset distance from a known point on the feature and following the feature's path to the desired location. Linear location referencing systems are used in geographic information systems for transportation (GIS-T) to integrate linearly referenced data and geographic coordinate positional data. This approach facilitates transportation infrastructure management and applications that use digital representations of transportation systems. Nevertheless, sharing of digital road map databases within and among organizations is difficult since there are no consistent ways of representing roads and different decision rules exist as to what roads to include.

Managers of transportation infrastructure think in terms of reference points, routes, road sections, and cartographic strings, while users think of vehicles operating on paths in networks from origins to destinations. The problem is to develop data models to encompass these perspectives of transportation systems. Various references (e.g., Fletcher, et al., 1996) present the results of a meeting of this community of perspectives for digital road map databases. Gordon (1996) elaborated on intelligent transportation system (ITS) needs for interoperable systems which include a comprehensive framework to handle multiple methods of referencing location in rich heterogeneous databases.

One must translate these needs to a data model as a first step to reach a consensus on transportation database design and data sharing standards. Data sharing is a concept of decentralized control over data resources. Consequently, there is a need for a robust data model to represent the complex relationships among the components of transportation systems. This data model must be able to support legacy databases, future enhancements, and database maintenance. The purpose of this appendix is to examine issues of sharing digital transportation map databases and to propose a data model that can accommodate different applications. What is proposed is best characterized as a GIS-T enterprise data model suitable for organizations responsible for maintaining transportation systems.

Most digital transportation map databases are link based, which poses a problem for data sharing. Parties must agree on a base network and external IDs for links to assure trouble-free data exchange. Yet, it is difficult to agree on a common base network. A more fundamental data model is needed to facilitate data sharing. We most distinctly address interoperability by adopting a nonlink-based approach.

Rich data resources exist in legacy databases that are used in GIS-T to build digital transportation map databases. The legacy databases may include data that use linear locational references in flat files or that are contained in link-based networks that are not compatible with databases to support new applications.

The data model needs to include the capacity to improve positional accuracy using larger scale cartography or data collected by a global positioning system (GPS) receiver. It also needs to handle various representation of airports, roads, intersections, and interchanges between a vicinity map and a local street map, from generalized representations to more detailed elements.

Maintenance of data is an important issue that requires independence of the entities that make up the data model. Highly integrated link-based models are difficult to maintain. A change to a roadway link may require that the whole network be recompiled. There needs to be independence among the geographic datum, the events that occur on the transportation system, the geometry to represent the system, and the traversals, links, and nodes that form networks.

A geographic datum anchors the digital transportation system to a geodetic framework. Events are attributes, occurrences, and physical components of transportation features, such as AADT, crashes, speed limits, bridges, and pavement condition. Events should be related to linear transportation features using a route/point linear location referencing system to make events independent of the cartography or network link representations, but still be defined in terms of their relative position in one-dimension space along the transportation feature.

Geometric representations of transportation features in two and three dimensions should also be independent to facilitate cartographic improvements and more accurate positioning of roadway-related features without having to recompile other parts of the database, and to allow multiple cartographic representations to facilitate display at various map scales and roadway detail.

Traversals of networks (routes and paths) should not be dependent on particular geometric representations, though they are network specific. Independent linear LRSs for traversals that utilize the transportation system, such as bus routes and delivery routes, also need to be supported.

Transportation features are ambiguous geographic features to digitally represent and uniquely identify because of the large number of different strategies by which they can be segmented. Cartographers segment transportation features for ease of digitizing or drawing, while pavement managers segment them by type of pavement, construction engineers by project limits, and traffic engineers at intersections. But at which intersections? Not intersections with driveways and often not with local roads. As this illustrates, segmenting of roads is not clear cut. Consequently, road segments are not unambiguous geographic features that can be uniquely identified for purposes of maintaining interoperable digital transportation map databases. Similarly, intersections of transportation features are not easily defined and uniquely identified.

Nevertheless, attempts to share digital transportation map databases tend to concentrate on finding a single representation of the transportation system that can be agreed to and adopted, then permanent link IDs assigned. This strategy has been unilaterally implemented by data developer organizations, such as the U.S. Bureau of the Census in developing TIGER and by Etak corp. in building MapBase 2.0. However, sharing of TIGER and Etak data involves a difficult conflation process because their link IDs are not compatible and their networks are not consistent. It is doubtful that the transportation community would agree to a single network representation or that the National Spatial Data Infrastructure (NSDI) would adopt any single organization's representation. Other solutions are needed. More user friendly external IDs, road names with defined endpoints, are proposed (Dueker, 1995).

Common names of transportation features can be used as one criterion for identification, but transportation features need more permanent identifiers. Road names and route numbers, for example, need to be handled as aliases and/or traversals for external access to data. Such externally identification of transportation features is necessary to compare and share data, irrespective of the cartographic or network representation. (See Appendix 2 for more details.) Evidence in the form of two empirical studies give credence to this approach to data sharing. First, the Viggen Corp. approach to network conflation is to collect the network chains by road name and replace the nodes with linear measures to resolve differences between the databases, and then reconstruct a network that contains the desired attributes of both (Okunieff, et al, 1995).

Second, in an Arc/Info environment, Liu (1996) constructs networks from "spaghetti" cartographic strings after selecting the level of importance (arterial, or arterial and local roads), using Clean and Build commands. This approach demonstrates the validity of maintaining linear data in a primitive form, and then constructing a network at the level of detail needed for a specific application.

These GIS approaches to data sharing can be facilitated by use of geographic points of registration (Vonderohe, et al, 1993). Anchor points in the proposed data model serve the database registration function, and must be present in all digital road map databases.

Appendix 2
Advantages and Disadvantages of Road Names as External Identifiers (Foreign Keys)

For the roadway system, transportation features are created by the complete partitioning of the system into unique, externally identified subdivisions that are commonly present in heterogeneous databases. Transportation features may also refer to things that are not roads at all. Non-road examples include air routes and railroads.

Irrespective of the inherent difficulties of segmenting roadways, the problem of unique identification of roadways must be faced. Many state DOTs create control sections, while others employ unique state numbered routes. Both methods employ linear referencing to record point and linear events and attributes located on the sections or routes. Sections and routes are numbered according to the controlling agency's methods. Unique, but arbitrary numbering facilitates data management within an organization but limits the sharing of data between systems, as one organization's internal ID may not be a very practical external ID for others to adopt.

The key to a common solution, we believe, is to use a real-world "name" for other users to access data. Like an internet address, users could use a publicly recognizable name while applications use the database's actual primary key numerical reference. Using real-world names as external IDs for data exchange facilitates consistency between systems, but introduces problems, such as name changes over time and non-unique street and road names across jurisdictions. Other problems include spelling variations, aliases, and overlapping routes, which would require standardization of naming conventions and changing ambiguous names and practices, problems for which solutions are available.

First, though, a formal definition of transportation feature is needed. Our working definition is "a portion of any transportation network that is referenced by a unique identifier." The principal criterion for defining transportation features in a roadway system is use of a common name within a jurisdiction. However, road names that change when crossing minor jurisdiction boundaries may not warrant being broken into separate transportation features.

Transportation features are confined to the limits of a jurisdiction that forms the basic unit for subdividing larger features and to which the linear LRS is tied. Thus, each transportation feature name, or identifier (ID), need be unique only within the context of a given county, for example, if that is the basis of assigning transportation feature IDs. The total unique transportation feature ID would be the concatenation of jurisdiction ID and transportation feature ID. Other jurisdictions and area-specific data are tied to an Area entity and do not control the road naming process. One or more alias names may be used for each transportation feature; these alternative names need not be unique as they can be stored as linear events or attributes of transportation features.

External references (foreign keys) may be used to extend the new GIS-T database to legacy databases. For example, one could use bridge numbers stored as a point event attribute to access a bridge inventory. Airports could be referenced by site number, and railroads by name and milepost (railroads typically have their own linear LRSs based on milepost). Transit services do not have a uniform LRS statewide except for service provider identity; each provider uses its own route naming convention. These local linear LRSs could be readily overlaid on the anchor section and transportation feature systems. Relating identifiers among legacy databases should be done by defining them as linear events of transportation features in the GIS-T database, whereas more ephemeral things, like delivery routes, should be defined as traversals.

It is important to distinguish between what may be considered to be a real-world name, such as Main Street, and a numerical reference, such as 04055010024. One possible option that eliminates many of the issues associated with proper names and other real-world external IDs is the use of a numbering scheme for creating the Transportation Feature Name value. Such an option could follow an approach similar to that used for internet addresses, with numeric codes for state, county, city, jurisdiction, or other important naming elements. Junction (intersection) codes could

be created by concatenating road names, with an added sequence number to address multiple intersections of the same roads. In the example "name" shown above, '04' could be the state code, '055' the county code, '01' the city code, and '0024' the sequence number reference for a street.

The solution to the road naming problem has two organizational variations. One is to name a single organization as the czar for assignment of unique roadway and street ID numbers (transportation feature names) and agree that all other organizations will follow their lead. The second is a decentralized approach of adopting street and road naming standards. In this case, the standard name is used as the unique external ID for data sharing, allowing each organization to employ their own internal IDs for database management. Alias names may also be offered.

The shortcoming of the first approach is that the lead organization, say the State DOT, would have to become responsible for managing the assignment of unique ID numbers including those of local streets, or delegating to local governments procedures by which to do it in a consistent manner. A potential shortcoming of the second approach is the need to define transportation feature beginning and ending points, and to choose which of two or more overlapping routes is primary for use as an external ID (could allow all). Resolving these issues will require the formation and operation of an inter-organizational standards committee.

In spite of the problems with the second approach, it seems the preferable way to foster data sharing in a decentralized environment. Naming rules could be designated by many relevant agencies (e.g., USGS, U.S. DOT, and/or AASHTO) or through an SDTS Transportation Profile. The creation of those rules is outside the scope of this proposal.

Appendix 3
Linear Location Referencing Systems

The way locations are described in a database is the location referencing system (LRS). Location descriptions external to the database are called real-world locations. LRSs include two-coordinate methods such as latitude/longitude, three-coordinate methods that also include altitude, and one-coordinate methods that show where an object is located in reference to a known point. An example of the last type is a linear location referencing system which is related to a linear datum. To reduce confusion, 'LRS' will be used to refer to the broader generic meaning while 'linear LRS' will refer to the more restricted meaning of linear location referencing system.

The discussion of the previous appendix dealt with a method for achieving standards in naming methods for transportation features. Of course, just having a universal naming standard does not solve all the problems of data exchange. One must also know where the transportation facilities exist. Thus, a universal location referencing system is needed. Lat/long, state plane, and other real-world coordinate systems are often utilized for data exchange, but, in the transportation field, these systems are of limited value in expressing where features or their characteristics are located on the transportation system. For this, one needs a linear LRS.

The proposed model anticipates primarily the transportation feature/event point linear LRS that locates point and linear events along linear transportation features based on an offset distance from a point of origin. The model of Figure 7 shows that multiple LRSs and datums may be used in a GIS-T database. For example, a bridge may have both a latitude/longitude address and a transportation feature/offset point address.

While linear LRSs may locate events on linear transportation features, a means is needed to locate those features in the real world. To meet this need, it has been frequently proposed that a system of anchor points and anchor sections be established. Anchor points would be located in multiple LRSs; i.e., linear and non-linear LRSs. Anchor sections, which extend from one anchor point to another along the path of a transportation feature, have direction and length as their primary attributes. Anchor section length serves as an additional quality control check for the accuracy of linear LRS measurements. Anchor points and anchor sections are also the geographic datum objects to which a linear LRS is tied. The anchor section is a centerline of a travelway, with anchor points being located along that centerline.

Anchor points, though, may be difficult locations to find since they are located on an abstraction of the road; i.e., the centerline. Anchor points need to be tied to reference objects, or points, which are the actual physical locations that a user can find in the field. Thus, it is really the reference object for which Vonderohe and Hepworth (1996) require an unambiguous location. Reference objects could be anything that is not readily movable, such as a curb intersection, bridge end, traffic signal post, or survey marker.

Figure 3-1 (next page) shows a highway traversing a county. The highway has been given the transportation feature ID of TF55010000, which is only illustrative. The ID means the spatial object is a transportation feature (TF) located in county 55, assigned the primary identifier 010, and is the original mainline alignment, as signified by the secondary identifier 000. The secondary identifier would be different if a new segment is established (realignment or extension), or if another segment were associated with the primary feature, as in the case of limited-access highway and its related entrance/exit ramps and access roads. The county and primary identifier portions of the ID form a family name for all related transportation features. Alternatively, a random (non-intelligent) number may be used for an ID while the various elements of the suggested intelligent ID treated as transportation feature attributes.

The use of an "intelligent ID" violates one of the general rules for primary keys. A separate, "invisible" primary key may be needed with the illustrated transportation feature ID serving as a foreign key or public ID. The intelligent numbering approach is presented here mostly to emphasize the relationships between datum objects.

Figure 3-1. *Transportation feature (highway) with the proposed geographic and geodetic objects.*

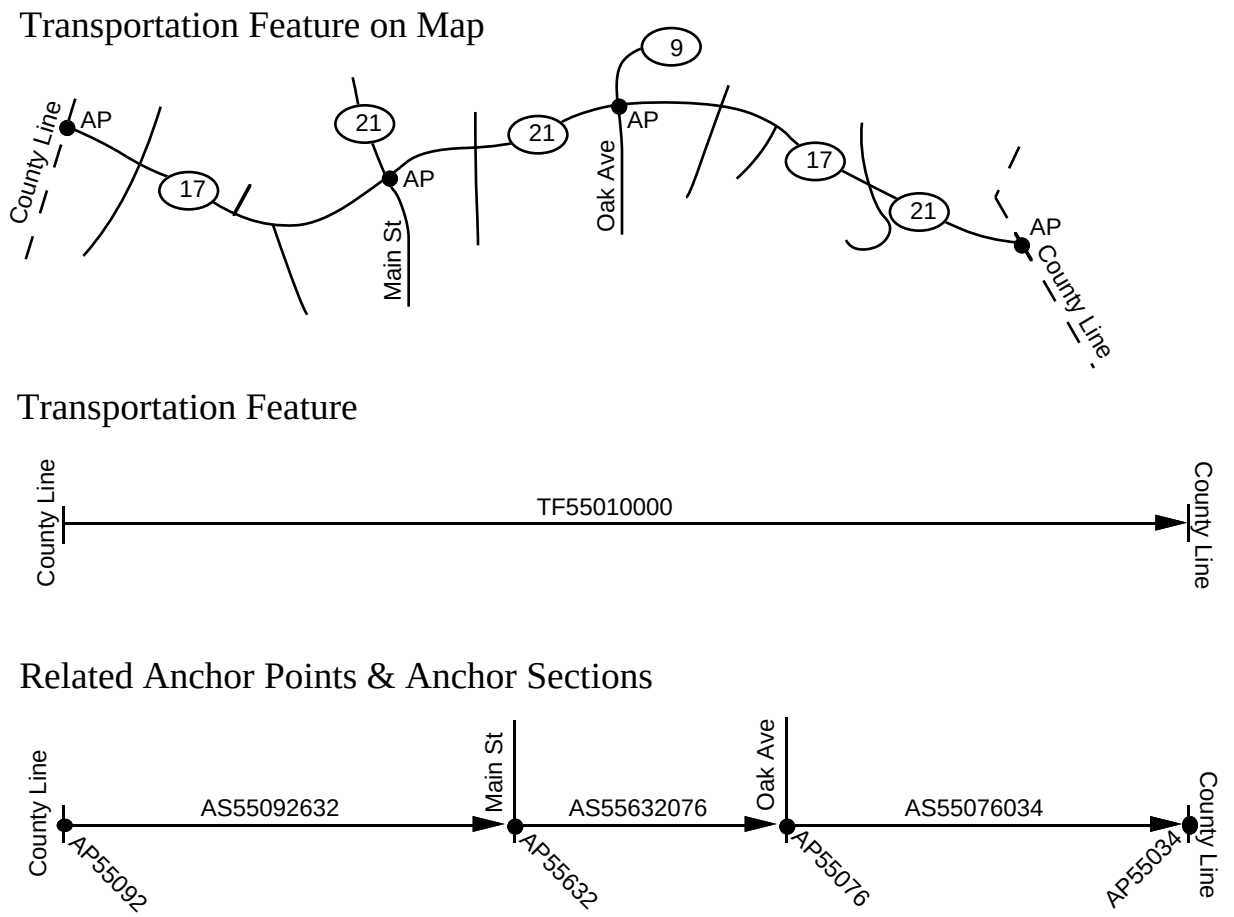

One numbering schema that is definitely <u>not</u> recommended is to use road numbers or names as a primary key. As shown in the example, TF55010000 is also Route 17 for its entire length. Parts of it may also carry other names, such as Taylor Road or Route 21. All these designations are simply attributes and may be readily changed; however, TF55010000 should never change, even if part of the road is realigned. (The realigned portion would get a new identifier, say TF55010001.)

Anchor points may be placed at the transportation feature termini. Intermediate anchor points in this example have been placed at two major intermediate intersections. Anchor point and anchor section identifiers have also been numbered to provide a relationship between them, again, only for illustration of a possible schema. Anchor points begin with the designation "AP" and the two-digit number of the county in which they are located. Anchor sections begin with "AS" and the number of the county they are located in, followed by the two terminal anchor point sequence numbers. Anchor points have location references as mandatory attributes. Anchor sections have direction and length as mandatory attributes. Coincident anchor points for portions of the road in adjacent counties would also exist.

To be valid, a datum must be tied to physical, real world locations that are unambiguously defined. This would seem to eliminate such field references as county lines and other jurisdictional

boundaries tied to monumentation since the monuments (signs) may not be properly and/or consistently placed. However, a linear LRS will work best if its origin is the beginning point of the road in the jurisdiction. The reconciliation of these two needs is to reference the jurisdictional boundary to a reference point that is unambiguously defined; i.e., make the location of the beginning anchor point and transportation feature origin 0.000 at the jurisdictional boundary, but locate the boundary (and origin) as an offset (plus or minus) from a reference point. The transportation feature is thus unambiguously tied to a datum-compatible location.

One or more anchor sections may be used to provide a geographic network reference context for a transportation feature. However, not all transportation features need to have a corresponding anchor section; some may be represented only by cartographic objects. A transportation feature not represented by an anchor section would be unavailable for direct external registration except as it related geographically to anchor points on other transportation features. Such may be the case for minor roads or planned new roads shown on a map.

A datum has been proposed for intelligent transportation system (ITS) applications which is based on the intersection of National Highway System (NHS) routes. A set of guidelines has been drafted to locate unambiguous points at or near such intersections so that their locations can be precisely surveyed and defined in a geodetic datum. These same points could serve as reference points for a national linear datum. (Goodwin, 1996)

Vonderohe and Hepworth (1996) have summarized the current ITS datum proposal and provided a number of specifications for linear LRS datum of all types. The most important of these is the need to unambiguously locate anchor points within the datum. The precision required to eliminate ambiguity can be calculated from the required accuracy for linear and point event locations.

It is important to note the difference between accuracy, precision, and resolution. Resolution is the proximity of objects that can be represented as being at different locations. For example, if measurements are recorded to the nearest meter, than objects at least one-half meter apart may be tied to different locations. Accuracy refers to the closeness with which a set of measurements approximate the true value, which cannot be absolutely known. Precision refers to the repeatability of measurements. Errors in accuracy when precision is high can be corrected through a uniform adjustment.

An increase in the density and precision of locating anchor points results in an increase in linear LRS measurement accuracy. The overall accuracy of the linear LRS is limited by the precision of linear offset measurements from anchor points to locations of interest (event points) along a transportation feature. This means that even if anchor points are located to great precision, linear measurements along the transportation feature can be no more accurate than that of the measuring instrument. Measurements made with such instruments as DMIs (distance measuring instruments) have errors that increase with distance; i.e., are said to propagate. Anchor point accuracy requirements should be determined by looking at both the needs of users and the ability of available field procedures.

A linear LRS datum design must provide a set of rules for defining, selecting, and locating anchor points and anchor sections, and for measuring the length of anchor sections. “Of particular concern are the identifiability and recoverability (persistence) of anchor points.” [Vonderohe and Hepworth (1996), p. 3] There are a number of business rules that must be defined to apply the general principles presented here and the referenced publications. For example, one must also decide whether separate anchor sections will be defined for each direction of a bi-directional highway, and how discontinuous routes, cul-de-sacs, and ramps will be addressed.

Appendix 4
Relational Database Design Principles

Relational database design is a subject sufficient to fill many books (it has!). While a full discussion of relational database design principles is clearly outside the scope of this paper, it is certainly within the scope to summarize some key points to illustrate how linearly referenced data can be stored in normalized relational tables.

The various steps in creating a “normalized” database design seek to reach a particular “normal form,” of which there are five. There are two well-known pioneers in the field who have written extensively on the subject. The first we quote is C.J. Date, who contends that all normalized relational tables must satisfy four properties (Date 1995, p. 99):

- They do not contain any duplicate rows or records.
- There is no ordering to the rows; that is handled by indexing.
- There is no ordering to attributes (columns).
- All attributes are atomic; i.e., not reducible.

It is this last requirement that Date has termed the foundation of normalization. In essence, an atomic record value is one that carries the most detailed information while avoiding redundancy. For example, if a section of highway has a speed limit of 45 mph, then there should be only one record that stores the speed limit value for that section of highway. The implication is that link-node data schemas and fixed-segmentation schemas cannot be normalized if attributes can span links or fixed-length segments. The resulting databases would be called denormalized. This isn’t necessarily a bad thing, but it is not universally good either. Most of the problems arise when updating the database in that one does not know that multiple records must be updated; i.e., the endpoints of given record cannot be guaranteed to represent the endpoints of a linear attribute.

Most designers try, at a minimum, to achieve what is known as third-normal form. The second pioneer we quote is E.F. Codd (from Date 1995), who defines the third-normal form as one where the non-key attributes are mutually independent and irreducibly dependent on the primary key. Two or more attributes are mutually independent if none of them is functionally dependent on any combination of the others. This means that each attribute can be updated independently of the others. The opposite is a denormalized table with multiple attributes where an update of one attribute will create "new" values for other attributes on the row.

Consider, for example, a typical transportation database with attributes for highway features, such as speed limit and functional class. The primary key is formed by combining ROADWAY_ID and BEGIN_MILEPOINT. A primary key is the combination of column values that uniquely identifies a row. No other row can have the same primary key:

ROADWAY_ID	BEGIN_MILEPOINT	END_MILEPOINT	SPEED_LIMIT	FUNC_CLASS	…
55010000	00.000	14.577	55	01	
55010000	14.577	23.575	55	02	
55010000	23.575	27.950	55	01	
55010000	27.950	30.475	45	03	

The table above is denormalized in that the various attributes are not mutually independent. A change in speed limit will produce a "new" value for functional class (even if it is the same value, it is on a new row and defines a new road segment). Functional class and speed limit are mutually independent in the sense that they have nothing to do with each other. Functional class and speed limit can change according to separate rules. However, the table forces them to be dependent in that one must update speed limit (i.e., create a new record value for the row) whenever a new record is created for functional class. More importantly, from the perspective of dependency, one cannot have a functional class without a speed limit, so the independence of insert

functions is lost. In addition, one cannot delete a row for functional class without also removing the speed limit.

Incidentally, END_MILEPOINT is an independent attribute and is dependent on the primary key in that it cannot be less than or equal to the primary key component of BEGIN_MILEPOINT. Some designers omit the end point attribute and derive it from the subsequent begin point or roadway origin. However, such an approach is impossible or very difficult with most relational database management systems (RDBMSs) and is discouraged.

The table also may be viewed as failing the test of atomicity in that speed limit has three consecutive entries of 55 mph due to changes in functional class. However, one can look at each row as the description of a piece of highway and, as such, is atomic for that piece of highway.

Even such a denormalized design satisfies the requirements for first-normal form. According to Codd (1995), there is only one requirement for first-normal form, which is that the underlying domain must contain only scalar values. This means that each attribute, or column, can contain only one entry, which is the case for the tables presented here.

The failings of the first table point to a normalized solution of two tables, one for speed limit and one for functional class:

ROADWAY_ID	BEGIN_MILEPOINT	END_MILEPOINT	SPEED_LIMIT
55010000	00.000	27.950	55
55010000	27.950	30.475	45

ROADWAY_ID	BEGIN_MILEPOINT	END_MILEPOINT	FUNC_CLASS
55010000	00.000	14.577	01
55010000	14.577	23.575	02
55010000	23.575	27.950	01
55010000	27.950	30.475	03

These two tables are in third-normal form in that they are scalar value domains (or ranges of values), every non-key attribute is irreducibly dependent on the primary key (ROADWAY_ID and BEGIN_MILEPOINT), and all attribute entries are atomic. The second characteristic means that the values for SPEED_LIMIT and FUNC_CLASS are based on location, as represented by the primary key. The problems with insert and delete functions for individual characteristics go away with this revised design as each highway characteristic is stored in its own table. However, problems remain for inserts and deletes involving an entire section of roadway and all its attributes. Such actions would have to search all tables to find applicable records for modification, deletion, or (in the case of adding a section of highway) creation. For example, to remove a segment between MP 07.954 and MP 09.388, one would have search every table to find all the ones that had one or more attribute values for that piece of road. This search can be hard to do and take a long time; it can and should be avoided.

To avoid this problem, the separate tables can be further reduced to a single table:

ROADWAY_ID	BEGIN_MILEPOINT	END_MILEPOINT	ATTRIBUTE	VALUE
55010000	00.000	14.577	FC	01
55010000	14.577	23.575	FC	02
55010000	23.575	27.950	FC	01
55010000	27.950	30.475	FC	03
55010000	00.000	27.950	SL	55
55010000	27.950	30.475	SL	45

This design simplifies the "big" update problem by requiring the update process to look only at one table to find which rows may need to be deleted, changed, or created to implement a particular update. The primary key must be expanded to include ROADWAY_ID, BEGIN_MILEPOINT, and ATTRIBUTE in order to properly construct an index and uniquely identify each row. Sorting by the primary key components of ROADWAY_ID and BEGIN_MILEPOINT will put all the

attributes for a given highway segment in order and allow an update/create/delete action to quickly identify the piece(s) of highway it needs to act upon.

A primary key may need to include other data elements. Consider the following table:

ROADWAY	BEGIN_POINT	END_POINT	SIDE	ATTRIBUTE	VALUE
55010002	02.875	04.532	r	speed limit	55
55010002	02.875	04.532	l	speed limit	55
55010002	04.532	07.931	b	speed limit	45

where

- The primary key is a composite of ROADWAY, BEGIN_POINT, END_POINT, SIDE, and ATTRIBUTE.
- SIDE codes are r (right), l (left), and b (both).

We submit that this table is fully normalized to at least third-normal form because:

- it has no repeating fields;
- there are no dependency projections without the key;
- only one attribute (VALUE) is completely dependent on the primary key;
- there are no functional dependencies in which the determinant is not a key;
- the multi-valued dependency (SIDE) has been eliminated as a repeating field; and
- there are no join dependencies.

If this is true, then there can be no update anomalies; i.e., there can be no data pathologies (there may still be business rule pathologies, such as cul-de-sacs). The generic Event Table we proposed in the data model uses event ID as a means of simplifying the primary key; it would replace BEGIN_POINT, END_POINT, SIDE, and ATTRIBUTE in this example table.

Using the term relation to mean table, C.J. Date stresses that:

> the level of normalization of a given relation is a matter of semantics, not merely a matter of the data values that happen to appear in that relation at some particular time. It is not possible to look at the tabulation of a given relation at a given time and to say whether or not that relation is in (say) third-normal form—it is also necessary to know the meaning of the data, i.e., the dependencies, before a judgment can be made. Note too that even knowing the dependencies, it is never possible to *prove* from a given tabulation that a relation is in third-normal form. ... [As long as dependency requirements are not violated], then the tabulation is *consistent with the hypothesis* that the relation is in third-normal form, but that fact of course does not guarantee that the hypothesis is valid. (Date, p. 303)

Thus, we say that linear LRSs, as shown in the tables above, are consistent with the requirements of third-normal form. We will go further and state that third-normal form design is not always the best thing for good GIS-T database design. Most GIS-T applications are of the type usually associated with executive information systems, decision support systems, and data marts/warehouses. Such applications often benefit from denormalization and pre-calculated fields, such as showing the number of lanes and calculating lane miles in tables of characteristics that can be summed to answer questions such as, "How many lane miles of principal arterial highways are there in _____ ?"

If each attribute is placed in its own table, then the user must "join" the necessary tables together to analyze correlations between multiple attributes. The resulting set of records would be denormalized in that it would look like the original one shown above. (All joins produce denormalized results with non-atomic values in the rows.) In fact, dynamic segmentation requires a denormalized table as input in order to display multiple characteristics (such as traffic volume with line width and jurisdiction with line color).

The bottom line is that third-normal form is appropriate as long as it serves the needs of an application; it is not a universal design specification. For example, we suggested a denormalized Node Table because it is considered to be a more efficient design than a normalized table. The opposite may be true for other applications in that there are times when even third-normal form may not be sufficiently normalized. In other words, business reasons, not dogma, should drive the database design process. Normalization is often justified for business reasons, such as application performance and simplicity. Date says that the valid reasons for doing normalization are (Date, p. 335):

- to eliminate certain kinds of data redundancy (note not all redundancies);
- to avoid certain update anomalies;
- to produce a design that is a 'good' representation of the real world--one that is intuitively easy to understand and a good base for future growth; and
- to simplify the enforcement of certain integrity rules.

Date also finds that dependencies are a good thing since they are reflections of business rules, and tries to design databases so the RDBMS can implement those rules by virtue of simply updating the database (Date, p. 336). SQL (the universal RDBMS access language) and RDBMS implementation rules (in the software) deal with data *values*, while Date's theories deal with data *meanings*. There is a difference.

Database and application design must be done simultaneously to create functionally efficient GIS-T applications and databases. The comments contained in this appendix are intended to present our design philosophies, which are expressed in the sample implementations (data table designs) listed in the main text of the paper. The table designs presented here are illustrative only. Readers are encouraged to reach their own conclusions based on their specific needs.

Appendix 5
The Spatial Data Transfer Standards

This paper uses the concepts and definitions of the Spatial Data Transfer Standard (SDTS), which is described in Federal Information Processing Standard (FIPS) 173. SDTS is mandatory for all federal information systems, and has been specifically endorsed by several states, such as Florida, as a state data sharing standard. Unfortunately, the SDTS database structure has not been defined at the physical implementation level to the extent needed to exchange all transportation data. A national user group is currently working to develop a Transportation Network Profile, or SDTS implementation method, for transmitting cartographic and topological data. However, the profile is substantially incomplete as a full database specification for other database elements. The first describes the existing SDTS. The last section offers a more complete specification for GIS-T.

The Current SDTS

SDTS uses a two-tier hierarchy of graphical items. The first is the group of **elements**, the basic graphic building blocks. Elements include points, line segments, strings, and areas. The second is the group of **objects**, complex graphic items that include "intelligent" connections to attribute data. Examples of objects include nodes, links, and chains. The relative position and connections between objects is described by **topology**. Topology is generally expressed within the objects themselves, not as something external. For instance, a link is defined by its terminal nodes. The connectivity of one link to another is found in their having at least one common terminal node. SDTS elements and objects are illustrated in Figure 5-1.

Figure 5-1. *SDTS terms illustrated.*

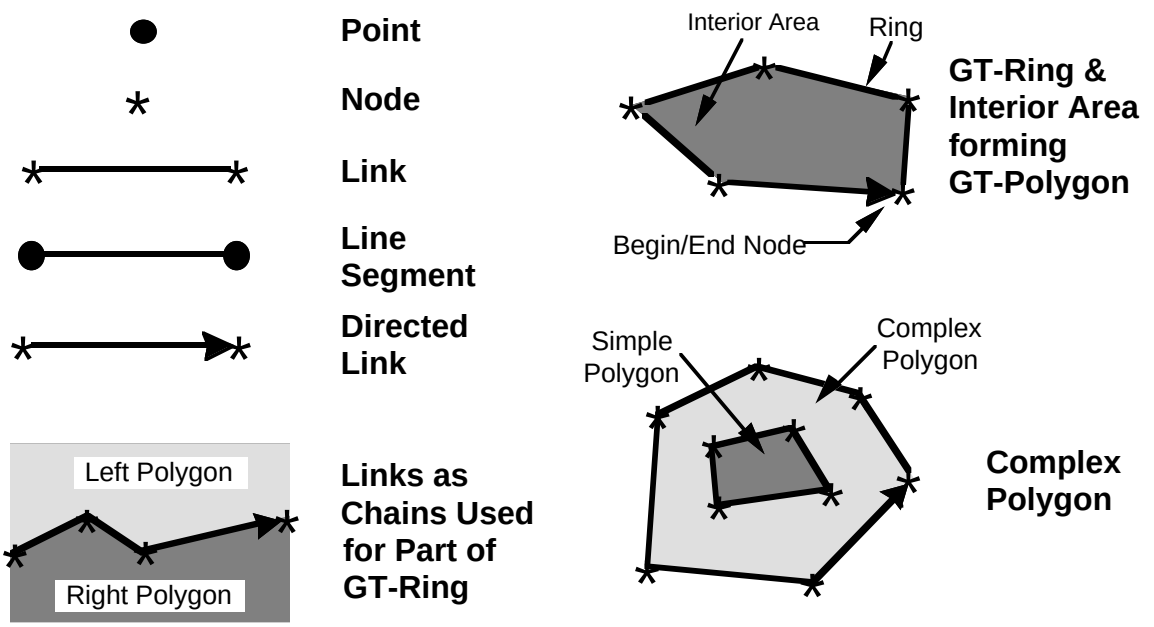

Note: Straight lines are used for GT-type objects only to illustrate their non-geometric aspects. Their component G-type objects can have shape points or arcs.

SDTS objects are divided into several subgroups. The two subgroups most applicable to the data model are geometric objects and geometric/topological objects. Geometric objects (a.k.a., G-type objects) are used to describe a drawing, or map, that illustrates the real world entities being represented. Geometric/topological objects (a.k.a., GT-type objects) are used to both illustrate the physical position of real world entities and their connections—the topology part. The specific SDTS terms used here are of both types. E-R diagram entities are used to represent each real-world item and all graphic elements and objects used to describe them in a map.

The following existing SDTS definitions are provided to show in more detail what geometric and topological aspects of the proposed model may already be satisfied. The official SDTS definitions shown here are those provided in the publicly accessible (Internet) version of the SDTS (Part 1, Logical Specifications, Section 2.3, Definition of Spatial Objects; and Section 1.4, Definitions). The published definition is shown in italics. A discussion or clarification of the meaning often follows each official definition.

Not all of the listed SDTS terms are needed for transportation features, but all potential components of a transportation database and cartographic expression are offered here to provide the full specification of a transportation transfer profile.

1. **Area.** (Geometric.) *A generic term for a bounded, continuous, two-dimensional object that may or may not include its boundary.* An area is a 2-dimension object in that it has planar shape and (at a given scale) size attributes. Areas may overlap one another, with or without boundary intersections. For example, an area representing the region covered by a city may overlay another area for the county in which the city is located. Both areas would be illustrated by polygons. In its simplest cartographic expression, an area is usually bounded by a string that defines a G-polygon. Areas are typically used on transportation maps to define political jurisdictions. Areas are not generally used to describe such transportation features as highways, which have been the traditional subjects of current GIS-T deployments. However, areas are appropriate for such transportation features as airports, harbors, rights of ways, building structures, wildlife mitigation areas, and water retention structures. Thus, areas do have a place in a transportation transfer profile. The SDTS recognizes three area types:

   a. **Interior Area.** (Geometric.) *An area not including its boundary.* For purposes of attribution and other data "handling" requirements, an area may be simplistically represented by an area point, or a geometric location within the confines of the area.

   b. **G-polygon.** (Geometric.) *An area consisting of an interior area, one outer G-ring, and zero or more non-intersecting, non-nested inner G-rings. No ring, inner or outer, shall be co-linear with or intersect and other ring of the same G-polygon.* The outer rings of inner G-polygons are expected to be co-linear with the inner rings of the larger G-polygon. A polygon with no inner rings is considered to be simple. One with inner rings is considered to be complex. Most displayed areas on a transportation map will take the form of simple, possibly overlapping, G-polygons, although the presence of a transportation feature inside a given area may be best expressed as an attribute of the feature. A complex polygon would be needed for a county (boundary forming the outer ring) if an included city is a "hole" within the county (boundary forming an inner ring). Such may be the case for road maintenance (i.e., if the county is responsible for only the unincorporated part) or the independent cities of Virginia.

   c. **GT-polygon.** (Geometric and topological.) *An area that is an atomic two-dimensional component of one and only one two-dimensional manifold. The boundary of a GT-polygon may be defined by GT-rings created from its boundary chains. A GT-polygon may also be associated with its chains (either the bounding set, or the complete set) by direct reference to these chains. The complete set of chains associated with a GT-polygon may also be found by examining the polygon references on the chains.* The primary difference between a GT- and a G-polygon is chiefly determined by the environment within which it exists. For example, a G-polygon may be bisected by a number of lines representing roads on a map without any change to the polygon itself. However, a GT-

polygon bisected by roads described by complete chains will be subdivided into many component polygons since each bisecting chain becomes part of the boundary GT-ring of the component polygons. It is this subdivision of the larger polygon that is implied by the term 'atomic' in the official SDTS definition of a GT-polygon. It is also implied by the absence of any reference to inner GT-rings in the definition. GT-polygons may be useful only for traffic flow models where transportation feature links define the boundary of traffic analysis zones. Full topology for representing transportation networks to serve other applications should generally be avoided.

2. **Chain.** (Geometric and topological.) *A directed nonbranching sequence of non-intersecting line segments and (or) arcs bounded by nodes, not necessarily distinct, at each end.* A chain may be used as a transfer mechanism to convey geometrics and topology, which may be separately represented by different entities, such as a string (geometry) and a link (topology) in the source database. Chain types in the SDTS are:
   a. **Network Chain.** (Geometric and topological.) *A chain that explicitly references start and end nodes and **not** left and right polygons. It is a component of a network.* A network chain is not closed and has distinct beginning and ending nodes. A path through a transportation system could be described using a sequence of network chains. A network chain may be constructed from a link, its implicit terminal nodes, and the string that defines the "shape" of the path taken to traverse the link.
   b. **Area Chain.** (Geometric and topological.) *A chain that explicitly references left and right polygons and **not** start and end nodes. It is a component of a two-dimension manifold.* An area chain could be used to define part of the boundary of one or two polygons.
   c. **Complete chain.** (Geometric and topological.) *A chain that explicitly references left and right polygons and start and end nodes. It is a component of a two-dimensional manifold.* A complete chain is a directed link that includes information on adjacent polygons; i.e., serves as a boundary (GT-ring) for polygons on both sides of the chain (left and right in terms of the link direction). A county boundary could be a complete chain and a highway could be a network chain. A portion of the highway that was also a boundary of the county would be part of both chains. A given line segment may be part of multiple strings and/or chains in an SDTS-compliant file structure. However, few (if any) existing commercial GIS products can implement this “multi-owner” structure.

3. **Point.** (Geometric.) *A 0-dimension object that specifies geometric location. One coordinate pair or triplet specifies the location.* Although a point location may be expressed in terms of a real world reference system, or datum, it is actually the expression of that point within a geometric (map) context. Such a context includes aspects of map projection and cartographic datum specific to each GIS software environment. The SDTS defines three special cases of point elements. Two of these (label point and area point) are really the result of GIS software design limitations and are not necessary for transferring transportation data, except that an area point may be used to convey a traffic analysis zone centroid:
   a. **Entity Point.** (Geometric.) *A point used for identifying the location of point features (or areal features collapsed to a point), such as towers, buoys, buildings, places, etc.* Entity points are the basic means for expressing such spatial features as accident site, airport, bridge, and crossing, that may be said to occur at a single place (perhaps only at smaller scale representations). If geometric and attribute information for such features is all that is required, then the existing SDTS is adequate. In our opinion, this information is usually not adequate.
   b. **Label Point.** (Geometric.) *A reference point used for displaying map and chart text (e.g., feature names) to assist in feature identification.* A label point provides only map location information and does not reflect a real-world location.

c. **Area Point.** (Geometric.) *A representative point within an area usually carrying attribute information about that area.*

4. **Line Segment.** (Geometric.) *A direct line between two points.* A line segment's end points need not represent anything more than the line segment termini; i.e., they do not have to be entity points. A line segment is located by referencing the two terminal point locations and "connecting them" through a mathematical function analogous to describing the slope of the line segment within the cartographic datum. Within this context, the term line segment includes the term **arc**, *a locus of points that forms a curve defined by a mathematical expression*. A line segment is a 1-dimension object in that it has only length as a mandatory attribute.

5. **Link.** (Topological.) *A topological connection between two nodes. A link may be directed by ordering its nodes.* A link in which the order of nodes is important is called a **directed link**. A given link is not directly related to line segment(s) or string that may illustrate it, but may be related to them as a component of a chain.

6. **Node.** (Topological.) *A 0-dimension GT object that is a topological junction between two or more links or chains, or an end point of a link or chain.* Multiple nodes can be related to the same point. Not all nodes need to be tied to a real-world location; some may represent conceptual locations, as in the case of traffic analysis zone centroids (e.g., area point) or simplified Interstate highway interchanges. From a topological perspective, one may move from one link to another only at nodes. In a non-planar implementation (one which recognizes that not all crossing roads intersect), nodes will not exist where non-intersecting lines cross; e.g., at a bridge overpass. Any successful transportation profile must support a non-planar data model. One may move from one coincident node to another (i.e., from one network to another) along a virtual link connecting the two coincident nodes. For example, a highway network may include a node at each airport. A separate node, also at each airport, would be present in the aviation network of air routes. A virtual link between these two nodes allows a connection to exist between the highway and aviation networks, each of which contains its own airport point event.

7. **String.** (Geometric.) *A connected nonbranching sequence of line segments specified as the ordered sequence of points between those line segments. A string may intersect itself or other strings.* Linear transportation features, such as highways, airport runways, and railroads may be represented cartographically by strings.

Proposed SDTS Additions

As noted earlier, the existing SDTS elements and objects listed above do part of the job of transferring information in a transportation database. They do not complete the transfer of geometric and topological data elements, nor do they address at all the real-world reference system of anchor points and anchor sections or the geometric needs of a data model with independence of cartographic and attribute data (the current SDTS requires that attributes be directly assigned to predefined geometric objects). Having multiple cartographic representations for a single attribute, is also a problem. The current SDTS does not readily support the transmission of, for example, point symbols at small map scales and strings at larger scales for attributes such as highway bridges without duplication. Topological needs are also not being met in that an entity describing complete paths across a network (traversal) is not presently supported. These shortcomings must be corrected.

Current SDTS specifications also fail to convey linear transportation feature attributes in that the SDTS requires those attributes to be assigned to a cartographic element, such as a string or chain. Since many linear transportation attribution schemas rely on variable linear feature segmentation methods, a universal set of strings to which all linear attributes may be assigned cannot be efficiently defined. It is when rigid segmentation rules are attempted, such as assigning

attributes to links, that many problems of database and application design appear. To avoid these problems, any proposed extension to the existing SDTS for the purposes of serving as a transportation transfer profile must avoid rigid segmentation rules.

Thus, we propose that the SDTS be extended beyond its currently limited geometric and topological content to provide a complete transportation transfer profile. To do so, we offer new and modified terms and definitions. To the extent possible, proposals by others are supported. The reference shown in parentheses immediately following each proposed term is the proposed SDTS object type. Two new ones are offered: (1) Geographic, to separate the real-world geodetic references from the cartographic ones currently included in Geometric objects; and (2) Transportation System Characteristic, to express transportation features, the context within which they are designated (jurisdiction), and their attributes.

1. Extend the group of point types to include geometric and geographic points as the two separate aspects (cartographic and real-world addresses) of entity points:

a. **Cartographic Point.** (Geometric.) *The internal address reference for map cartography of an entity point.* This is the cartographic address of a point. Most commercial GIS and CAD software use a proprietary internal coordinate system to locate graphical elements. This internal system is the **cartographic datum**.

b. **Geographic Point.** (Geographic.) *A 0-dimension object carrying the real-world coordinate location (e.g., latitude/longitude/elevation, or route/milepoint) of an entity point.* This is the physical address of a point. The address information for a geographic point is expressed within the context of a **geodetic datum** and **location referencing system**; e.g., North American Datum 1983 and State Plan Coordinate System. (The model offered in the main text combines the geodetic datum and LRS into a single entity, Geographic Datum.)

c. **Event Point.** (Geographic.) *A 0-dimension object carrying the location of an event relative to its position on a transportation feature.* Event points are normally defined using an offset distance from the origin of a linear transportation feature. They may be additionally or exclusively defined by geographic points.

d. **Reference Point.** (Geographic.) *A 0-dimension object specifying the location of the reference object to which an anchor point is tied.* Reference points are normally defined as geographic points (i.e., with a real-world coordinate location) and a real-world description, such as "monument in northeast corner of Oak St. and Main St. intersection."

2. Create new linear datum objects for transportation:

a. **Anchor Point.** (Geographic.) *A 0-dimensional object specifying a single geographic location used for registration of databases.* (The potentially equivalent term 'linear reference point' suggested in another proposal is rejected here due to the more widespread use of the term 'anchor point' in the transportation community.) In order to serve the database registration function, an anchor point must be present in all databases and locatable on a map as well as in the real world. Anchor points could be placed at prominent bridges and intersections, for example. Anchor points must be defined at least for the beginning and ending locations of anchor sections.[2] Anchor points have only a real-world identifier, such as the name of an intersection, and are tied by *x, y* offsets to a readily locatable **reference point**. The real-world location (address) of a reference point is given by a geographic point, while its cartographic location is defined by a cartographic point. The linear LRS location of an anchor point can only be defined within the context

[2] NCHRP 20-27 and subsequent work by its authors do not require anchor points to be defined for anchor section intersections. However, we believe that such intersections are most likely to be the locations that need to be properly registered during data exchanges.

of specified transportation features. Therefore, the linear LRS addresses of anchor points are attributes of the anchor sections they form.

b. **Anchor Section.** (Geographic.) *A 1-dimensional object providing a logical representation of all or part of a linear transportation feature.* An anchor section begins and ends at ordered anchor points and, thus, has a specified direction. This direction is the one in which linear location references are measured, not the direction of traffic flow. The relationship of anchor points to anchor sections is analogous to that of nodes to links. However, the lack of topological attributes, such as allowable travel directions on anchor sections, or permitted "turns" at anchor points, makes them different from links and nodes.

3. Define the term, 'transportation feature':

Transportation Feature. (Transportation System Characteristic.) *An element of a transportation system that may be uniquely identified in the real world and for which attributes are provided.* Transportation features are confined to the limits of a **jurisdiction** (interior area), which forms the basic unit for providing feature names. For the roadway system, transportation features result from the complete partitioning of the system into unique, externally identified subdivisions that are commonly present in heterogeneous databases. Transportation features would serve to organize the entire database, with jurisdiction being the highest level of the organizational hierarchy. Each transportation feature name, or reference, need be unique only within the context of a given jurisdiction. Under no circumstances should the name or identifier of a transportation feature be something that may change, such as its route number or facility name. It is the physical entity that is referred to by a transportation feature ID. The total unique transportation feature ID could be the concatenation of a jurisdiction ID and transportation feature ID. (Name need not be anything other than a numeric identifier.) Other jurisdictions and area-specific data are tied to an interior area or polygon and do not control the road naming process. One or more alias names may be used for each transportation feature; these alternative names need not be unique as they can be stored as linear or point events (attributes).

Often, the common street or road name constitutes the principal criterion by which to define the related set of transportation features. Physically continuous transportation features may be subdivided at major jurisdictional boundaries (both sides of boundary may have the same name but are within separate primary jurisdictions) or combined across minor jurisdictional boundaries (both sides of boundary may have different names but are within one primary jurisdiction). For example, if the primary jurisdiction is the county, then roads traversing multiple cities within that county may comprise a single transportation feature. Conversely, roads crossing multiple counties would be subdivided into separate transportation features, one for each county.

4. Create a term to represent the intersection of transportation features:

Junction. (Transportation System Characteristic.) *A location where two or more transportation features cross or connect.* The term includes both generic intersections, such as where two streets cross, and where the unique identifier of contiguous transportation features change, such as at a jurisdictional boundary. The term also includes the connection between different transportation modes, as in the case of an airport being the junction of ground and aerial transportation facilities or services. The concept of junction may also be applied to places where transportation features cross but do not intersect to meet application needs. For example, a bridge over a navigable waterway could be a non-intersection junction between the highway and waterway networks.

Junctions may relate through entity points to nodes, if applicable, and to cartographic points, geographic points, and point symbols. Junctions could also relate to strings if, for example, a highway interchange (represented fundamentally as an entity point) could be expanded at

larger scales to provide additional detail by using the junction reference as a foreign key to a table of interchange drawings. The Junction entity is a place to store attributes such as traffic control, allowable turns (for pathfinding applications), turning movement counts, crashes, and similar attribute data.

The definition of junction in this paper goes beyond that of the proposed transportation data dictionary from the Ground Transportation Subcommittee (GTS) of the Federal Geographic Data Committee (FGDC) in that it is multimodal and covers the intersection of linear and point transportation features, such as highways and airports. As defined in this proposal, the term junction could include the term crossing, as it is defined in the GTS proposal. The joint use of junctions to mean road intersections and overpasses allows more efficient pathfinding. An overpass "junction" or crossing would have no allowable turns, of course, but could be used to store information on bridge loading limits and overhead clearance, for example.

Some transportation system elements belong to more than one transportation feature. For example, a bridge could be seen as part of the facility it carries and the one it crosses to form a junction (note that one need not be able to move from one transportation feature to another at a junction with the definition proposed here). Thus, junctions formed by the intersection or crossing of transportation features of different types, such as rail-highway grade crossings, may be viewed as the set of multimodal objects. Paths through the transportation system may move from one mode to the next only at such junctions. Of course, junctions formed by the intersection of transportation features of the same type, such as two intersecting streets, serve to move one along a path through that particular network.

5. Provide an attribute-centric way to transfer transportation system characteristics independently of the cartography:

A bridge may be viewed both as an attribute of a highway and the river it crosses, and as a transportation feature in its own right. The SDTS does not adequately convey these two aspects in that it fails to fully recognize the attribute aspect. The SDTS also fails to provide a direct way to transfer attributes without their being assigned to a specific cartographic (geometric) object. Both shortcomings can be addressed with a single solution: events.

From a logical database design perspective, we propose that all transportation feature attributes be associated with the larger feature(s) of which they are a part. For example, we have already addressed the relationship of linear transportation features and the networks they form. Here, we will address point and linear transportation system characteristics that describe or are part of larger linear transportation features. In doing so, we also address transportation feature attributes by using a common data structure.

Linear and point events are elements or characteristics of a transportation feature. Elements include tangible objects, such as bridges, signs, guardrails, and intersections. Characteristics include less tangible aspects of a transportation feature, such as a road's speed limit, the pavement surface type, the type and width of a median, the airlines serving a particular air route, or the trains using a specific railroad track.

Most state departments of transportation have used straight-line diagrams and related attribute databases to graphically describe highways. In many ways, state DOTs look at GIS-T as an evolutionary step that puts true shape into these diagrams and allows connections (topology) between what were previously separate diagrams. Any SDTS transportation data dictionary or transfer profile must support this data structure. (See Figure 5-2 on the next page.)

The Linear LRS is the glue that binds transportation features to their linear and point events, as well as to the geographic datum of anchor points and anchor sections that place the transportation features on the surface of the Earth. Of course, not all transportation features are on the Earth, with aviation being the primary exception. Linear LRSs may be applicable to aviation, but since the air routes between airports are more conceptual than physical, the aviation system may be one mode of transportation to which this glue does not stick.

In Figure 5-2, the same transportation feature has been visually described in several ways. The first is simply a straight line representing the transportation feature as a single entity. This entity has been given the identifying number 55010000. To this simple representation, a straight-line diagram will add attributes from a transportation database. The examples shown include point and linear events both on and adjacent to the road, called Transportation Feature 55010000. The following tables show the data used to create the straight-line diagram:

Figure 5-2. *How existing transportation databases (displayed using a straight-line diagram) can be integrated with the proposed geographic and geodetic objects.*

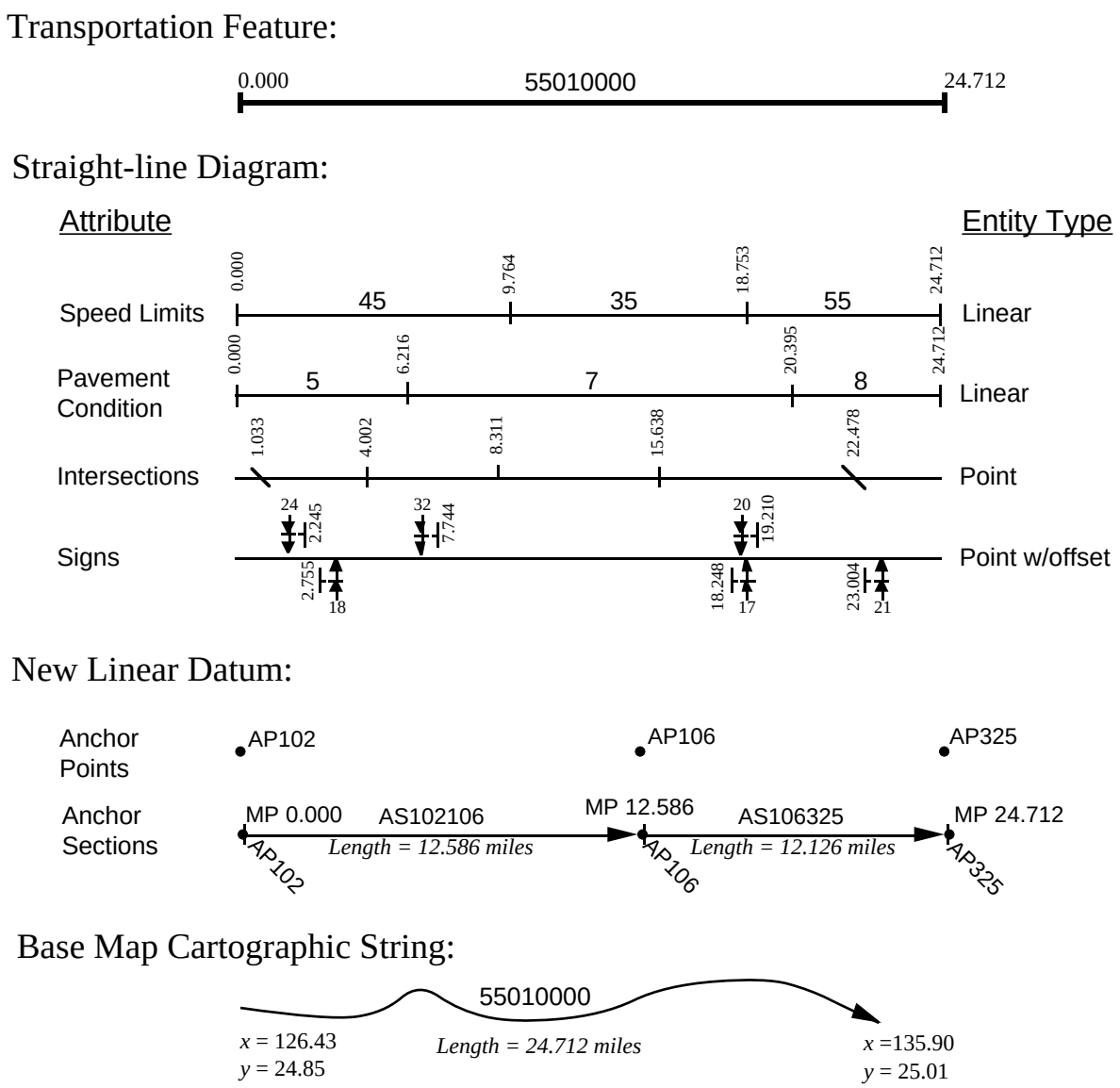

Speed Limit Table

ROADWAY ID	BEGIN MP	END MP	SPEED LIMIT
55010000	0.000	2.640	55
55010000	2.640	6.486	50
55010000	6.486	9.764	45
55010000	9.764	18.753	35
55010000	18.753	24.712	55

Pavement Condition Table

ROADWAY ID	BEGIN MP	END MP	CONDITION
55010000	0.000	6.216	5
55010000	6.216	12.984	7
55010000	12.984	14.539	6
55010000	14.539	18.044	7
55010000	18.044	20.395	6
55010000	20.395	24.712	8

Intersection Table

ROADWAY ID	MP	ANGLE	TYPE
55010000	1.033	45	cross
55010000	4.022	90	cross
55010000	8.311	90	left tee
55010000	15.638	90	cross
55010000	22.478	45	cross

Sign Table

ROADWAY ID	MP	SIDE	FACING	OFFSET
55010000	2.245	left	westbound	24
55010000	2.755	right	eastbound	18
55010000	7.744	left	westbound	32
55010000	18.248	right	eastbound	17
55010000	19.210	left	westbound	20
55010000	23.004	right	eastbound	21

Some attributes are expressed as annotations (e.g., milepoints), others as geometry (e.g., angles of intersecting streets). Straight-line diagrams may show these attributes and objects on separate lines, as depicted here, or all on one line using various graphical methods, such as line width and pattern, or by placing tic marks across the road and labeling both sides of the mark to show what value changes at that point. Additional attributes could be provided for the entities shown; e.g., intersecting street name, sign legend, etc.

Next, the figure shows geographic datum in the form of anchor points and anchor sections. Anchor points are assigned an identifier beginning with 'AP' and are described using the reference point's location in a geodetic datum adjusted for anchor point offset from that reference point. Anchor sections are assigned an identifier beginning with 'AS' and the concatenated anchor point numbers; they are also described by length. An intermediate anchor point has been placed at an intersection near the mid-point of the transportation feature, which has been defined by two whole anchor sections. (As noted earlier, the proposed rule is that anchor points must be placed at transportation feature termini.)

Below this is a cartographic representation of the road as it may appear on a map in its approximate planar image as if viewed from the air. Because of the curves, the left-to-right length of the highway string appears shorter than the straight-line objects listed above it.

Dynamic segmentation would combine these various representations using the linear LRS to place attributes on the highway string, thereby creating new strings that corresponded to the extents of the component linear attributes. Dynamic segmentation can also be used to place point symbols at the correct relative position on the highway string. Of course, there is a limit on the number of attributes that can be shown on a single map given the need to have each clearly conveyed.

To implement the concepts of linear and point events on transportation features, two new SDTS terms are proposed.

a. **Linear Event.** (Transportation System Characteristic.) *An attribute of a transportation feature that has distinct beginning and ending event points (i.e., length), or a means by which to relate attributes to part or all of a transportation feature.* Linear events include such attributes as functional class, speed limit, pavement type, and traffic volume.

   Linear events are defined in terms of beginning and ending point events along linear transportation features, with the location of those points defined in the context of a linear location referencing system; i.e., by a distance measure (offset) from a point of origin. The use of linear events and dynamic segmentation precludes the need to aggregate attributes in accordance with a rigid transportation feature segmentation schema; e.g., link/node or fixed distance. To relate attributes defined as linear events to geometric representations of transportation features requires that the relevant geometric strings have the same end points and length measure (at scale) as the transportation features they represent. This enables interpolation along strings to locate linear events using dynamic segmentation functions in software, as shown above.

   Some transportation databases support lateral offset measurements for things such as guardrail which may not be adjacent to the road. Others may have data stored by side of road, as in the case of divided highways, in order to show attributes such as number of lanes, pavement type, and curvature. For such transportation features as air routes, linear events may be air carrier flight numbers, passenger traffic, and traffic control responsibility. Linear events occurring as part of transportation features may include attributes offset from a road edge, such as a guardrail or fence.

   Linear events may also be used to represent an **area event**, which is really an attribute of an area, by defining a linear event as the attribute of a transportation feature segment relative to its being inside or outside the area. For example, one could define an attribute to report whether a given location was inside or outside a city. The value of this attribute would change each time the city limits crossed the transportation feature. Such area events need not relate to a cartographic area. (While the proposed addition to the SDTS should recognize area events, this proposal does not imply that such a term needs to be formally defined separate from those areal objects that currently exist in the SDTS; e.g., G-polygon.)

b. **Point Event.** (Transportation System Characteristic.) *A location where some transportation feature or attribute occurs as defined by a single event point.* Examples include bridges, intersections, traffic counting sites, and similar point-like features. Some of these point-like features may alternatively or additionally be represented as linear or area events; e.g., at larger scales one may choose to show bridges as linear events. Point events may have real-world locations and positions along an anchor section, a linear transportation feature, and anywhere else within the involved geographic or cartographic space. Point events occurring on transportation features may be located cartographically in the same manner as linear events using a linear location referencing system and the

dynamic segmentation function. Point events occurring as part of transportation features may include those offset from a road edge, such as a sign.

Since linear and point events are two cases of the same data entity (attribute), they may be physically implemented using a common table structure. Conceptually, point and linear events are a single entity; however, they are separated here to reflect the different relationships established between an event entity and other entities based on whether it is a linear or point event. Thus, a given transportation feature or event may be shown on a map at small scale as a point and at large scale as a line.

6. Add terms to serve as a collection of one or more links in a transportation network so that a path through a portion of that network may be defined:

a. Traversal. (Topological.) *A path or route through a portion of a transportation network consisting of one or more links.* Traversals may be **static** (defined as a stored path, such as for an entire highway across a state) or **dynamic** (defined "on the fly" to meet some particular set of criteria); the distinction is mainly for ease of stating system functions. Traversals may have attribute data associated with them directly, but most data will be associated through the included **traversal segments**.

b. Traversal Segment. (Topological.) *An atomic component of a traversal comprised of one or more links and relevant attributes.* Traversal segments are the result of joining linear events with links that form a path through the transportation network. Point event data would be used as if they were linear events; e.g., the number of bridges on a route, or the minimum clearance of overhead structures. It is possible to show attribute data being part of link records, but the approach suggested here is to separate a simple schematic element (Link) from a richly described element (Traversal Segment). In pathfinding routines, links show the possibilities; traversal segments provide the information needed to find the links meeting the stated selection criteria. Thus, it may be desirable to separately define traversal segments as a spatial entity and traversal as a sequence of one or more traversal segments. This would be especially advantageous where a traversal segment was composed of multiple links.

c. Traversal Member. (Topological.) *The assignment of a specific traversal segment to a given traversal.* A traversal member table in the transfer data set would provide a list of traversal segments used by each traversal. Traversal members may be numbered in a logical sequence to define the traversal from beginning to end. This numbering may be provided by a traversal-specific linear LRS, with the values of traversal segment beginning ending points being defined in that LRS as offsets from the traversal origin.

7. Recognize a standard transportation data model:

Current GIS software products implement a number of internal (and possibly different external) data models, none of which fully reflect the way transportation data are used. It is suggested that the GTS and FGDC formally recognize a standard transportation data model as a means of expressing the manner in which transportation data are organized and used by public and private agencies. The model offered in the Figure 7 of the main body of the paper is a proposed starting point. The cartographic entities in the proposed data model are illustrative only and may be changed to convey more complex objects.

Two cartographic entities not previously defined are also included in the complete model. An entity for point symbols has been included as they serve as the equivalent set of cartographic objects for point events as strings do for linear events. Base map strings have been separately modeled from linear event strings to illustrate the fact that the latter exist only as expressions of the linear events described in the characteristics component of the model. Most data transfers would not actually convey both sets of strings. A user with the capability to perform dynamic segmentation would utilize only the base map cartographic strings, while a user without that software function would accept the data as line strings that were already

segmented to provide a one-for-one relationship with the included linear attributes. Given the rich number of potential linear events (attributes) to be transferred, it would be much more efficient for the recipient to do dynamic segmentation rather than receive a set of maps, one for each attribute.

Appendix 6
References

American Association of State Highway and Transportation Officials, *AASHTO Linear Referencing Workshop Technical Notes*, 1995 GIS-T Conference, Reno NV, April 1995.

Butler, J. A., *An Enterprise Database Design*. Florida Dept. of Transportation, Tallahassee, FL, 1995.

Date, C.J., *An Introduction to Database Systems*. 6th ed. Addison-Wesley, Reading, MA, 1995.

Dueker, K. *National Framework Data: Models for Ground Transportation Data*, Discussion Paper 95-4, Center for Urban Studies, Portland State University, 1995.

Dueker, K. and R. Vrana, "Dynamic Segmentation Revisited: A Milepoint Linear Data Model," *Journal of the Urban and Regional Information Systems Association 4*, No. 2, pp. 94-105, 1992.

Ensor, Dave, and Ian Stevenson, *Oracle Design*, O'Reilly & Assoc., 1997.

Fletcher, D., Espinoza, R., Gordon, S., Spear, B. and A. Vonderohe, *The Case for a Unified Linear Reference System*, Presented at a Workshop on Enterprise Location Referencing Systems: Policies, Procedures and Standards for Implementation, Department of Geography, University of Utah, July 26-27, 1996.

Fletcher, D., et al., *The Case for a Unified Linear Reference System.* Alliance for Transportation Research, New Mexico, 1996.

Gordon, S., *Overview of ITS Location Referencing Issues*, presented at a Workshop on Enterprise Location Referencing Systems: Policies, Procedures and Standards for Implementation, Department of Geography, University of Utah, July 26-27, 1996.

Hickman, C, and P. Altheide, *Overview of SDTS Profiles*, posted at http://mcmcweb.ir.usgs.gov/sdts, 1996.

Liu, W., *Sharing Transportation Data*, Discussion Paper 96-5, Center for Urban Studies, Portland State University, forthcoming.

Morrison, J. L., and K. Wortman, eds., "Special Issue: Implementing the Spatial Data Transfer Standard," *Cartography and Geographic Information Systems*, Vol. 19, No. 5, Dec. 1992, American Congress on Surveying and Mapping, Bethesda, MD.

Okunieff, P., D. Siegel, Q. Miao, and S. Gordon (1995) "Location Referencing Methods for Intelligent Transportation Systems (ITS) User Services: Recommended Approach," *Proceedings*, 1995 GIS-T Symposium, AASHTO, pp. 57-75.

Viggen Corp. , *ITS Location Referencing System: Dynamic Assignment of Network Attributes*, Draft, 21 Union St. Boston MA 02108, 1994.

Vonderohe, A., et al., National Cooperative Highway Research Program (NCHRP) Project 20-27 reports published by National Academy Press, Washington, DC

a. "Implementation of Geographic Information Systems (GIS) in State DOTs," *Research Results Digest 180*, Aug. 1991;

b. "Management Guide for Implementation of Geographic Information Systems (GIS) in State DOTs," *Research Results Digest 191*, Oct. 1993;

c. *Report 359: Adaptation of Geographic Information Systems for Transportation*, 1993.

Vonerohe, A., C.L. Chou, F. Sun, and T. Adams, "Results of a Workshop on a Generic Data Model for Linear Referencing Systems," *Proceedings of Geographic Information Systems for Transportation Symposium*, April 1995, Sparks, NV, pp. 23-56.

Vonderohe, A., and T. Hepworth, *A Methodology for Design of a Linear Referencing System for Surface Transportation*, prepared for Sandia National Laboratories, Project AT-4567, Dec. 1996, University of Wisconsin, Madison, WI.